S C R E E N S

2 0 2 5

CATALOGO
CUPOLINI
SCREENS



MALOSSI

Vuoi dominare il vento o lasciare che il vento ti domini?
In Malossi non abbiamo dubbi: vesti il tuo scooter di una nuova grinta sportiva con i nostri cupolini e decidi tu come gira il vento.

Do you want to dominate the wind or let the wind dominate you?
At Malossi, we have no doubts: dress your scooter with a new sporty grit with our windsreen and decide how the wind blows.

S C R E E N S

INDEX

DESCRIZIONE
DESCRIPTION
3

GAMMA
RANGE
4

DETERGENTE MULTIUSO ANTISTATICO
ANTISTATIC MULTIPURPOSE CLEANER
69

PANNO IN MICROFIBRA MALOSSI
MALOSSI MICROFIBER CLOTH
70

2 CAPPUCCI VALVOLA CAMERA D'ARIA BIANCHI PER PNEUMATICI
2 WHITES PLUGS FOR TYRE INNER TUBE VALVE
70

ADESIVI
STICKERS
71

TABELLA COMPLETA DELLE APPLICAZIONI
COMPLETE TABLE OF APPLICATIONS
83

Malossi si riserva il diritto di apportare modifiche tecniche, di codice, di prezzo, qualora lo ritenesse necessario e non si assume alcuna responsabilità per eventuali errori tipografici e di stampa.
Prodotti riservati esclusivamente alle competizioni nei luoghi ad esse destinate secondo le disposizioni delle competenti autorità sportive. Decliniamo ogni responsabilità per l'uso improprio.

Malossi reserves the right to make technical, code, or price modifications and accepts no liability for any typographic or printing errors.
Products to be used exclusively for racing in places specially designed for such activity according to the regulations of the competent sporting authorities. We accept no liability resulting from improper use.

CUPOLINI

Screens

In Malossi abbiamo realizzato una linea aggressiva di spoiler aerodinamici e protettivi perfettamente intercambiabili agli originali, in PMMA acrilico di qualità eccellente in colore fumé scuro o chiaro, con logo Malossi di 8 cm serigrafato bianco.

Ogni cupolino Malossi è progettato attraverso i più moderni strumenti di design, per garantire la visibilità del pilota in assetto di gara.

E a proposito di visibilità: mantieni il tuo cupolino pulito e brillante con il nostro panno in microfibra, delicato ma impietoso contro lo sporco, e N° 1, il detergente antistatico Malossi che fa brillare qualsiasi superficie.

SCREENS

We have created an aggressive line of aerodynamic and protective spoilers, perfectly interchangeable with the original ones. Made from high-quality dark or light smoked PMMA acrylic, in dark or light-smoked shades, each one features an 8 cm Malossi logo in white silk-screen printing.

Each Malossi windscreen is designed using the most modern tools to ensure the rider's visibility in racing position.

About visibility: keep your windscreen clean and shiny with our microfiber cloth – gentle on surfaces but tough with dirt – and N° 1, the antistatic Malossi cleaner that repels dust.

8 CM
MALOSSI LOGO



4513099

FUMÉ SCURO
DARK SMOKE

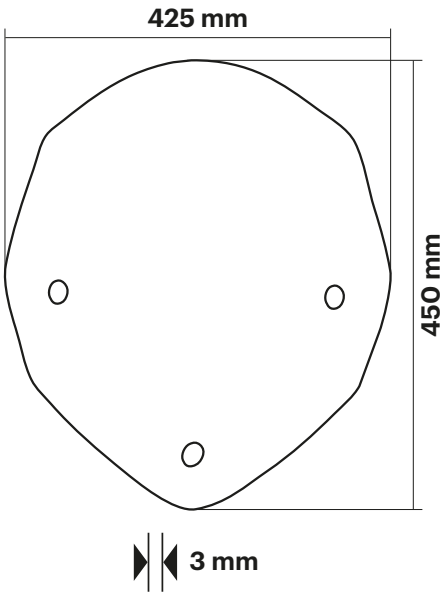

APRILIA
SR MAX 125 IE 4T LC EURO 3 2011->2014 (M357M)
SR MAX 300 IE 4T LC EURO 3

GILERA
NEXUS 125 4T LC EURO 3 2007->2008 (M355M)
NEXUS 125 IE 4T LC EURO 3 2008->2010 (M357M)
NEXUS 250 IE 4T LC EURO 3
NEXUS 300 IE 4T LC EURO 3
NEXUS 500 IE 4T LC EURO 2-3



4514399

FUMÉ SCURO
DARK SMOKE

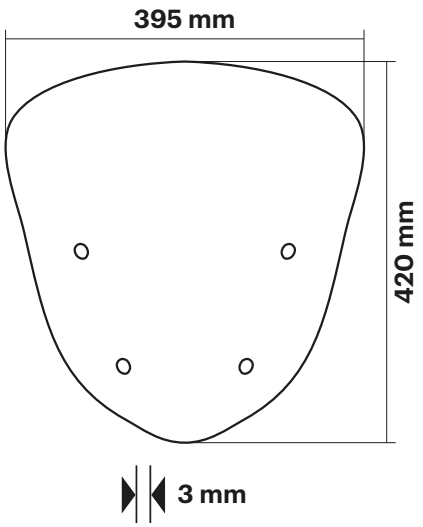

GILERA
GP 800 4T LC (PIAGGIO M554M)



4514400

FUMÉ SCURO
DARK SMOKE

YAMAHA
X MAX 125 IE 4T LC EURO 3 <-2008
X MAX 250 4T LC
X MAX 250 IE 4T LC EURO 3 2008->2009 (G362E)

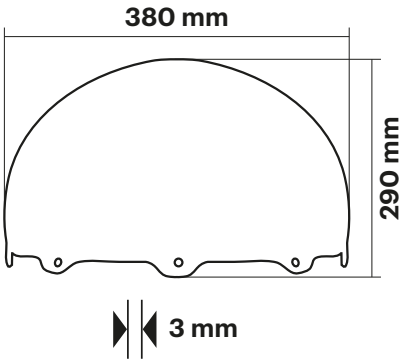



4514604

FUMÉ SCURO
DARK SMOKE

YAMAHA
X MAX 125 IE 4T LC EURO 3 2009->2013
X MAX 250 IE 4T LC EURO 3 2010->2013 (G389E)

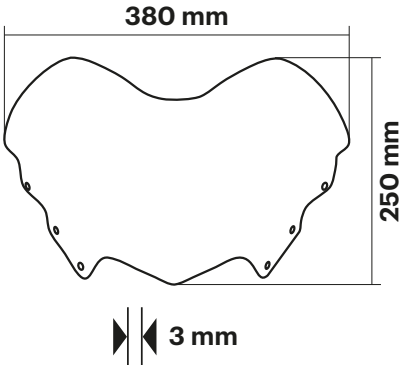



4514607

FUMÉ SCURO
DARK SMOKE

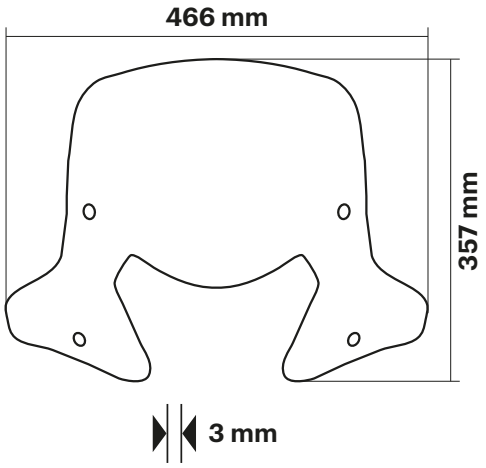

HONDA
SH I 300 IE 4T LC EURO 2 <-2010 (NF02E)



4514760

FUMÉ SCURO
DARK SMOKE

YAMAHA
T MAX 500 IE 4T LC 2008->2011

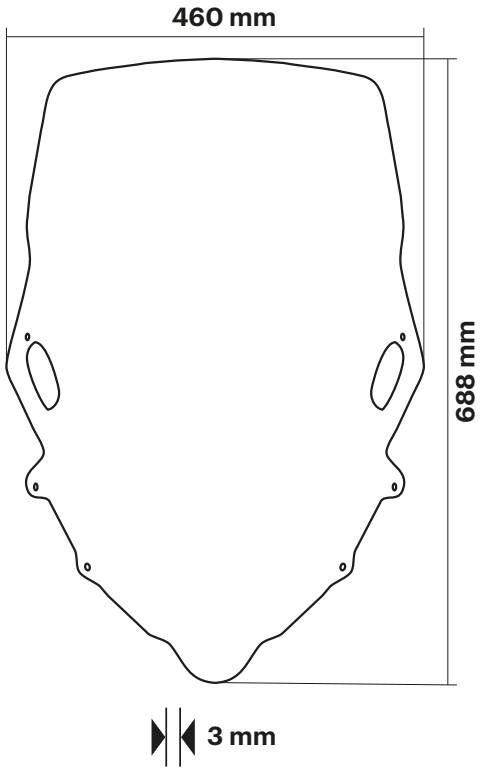



4515116

FUMÉ SCURO
DARK SMOKE

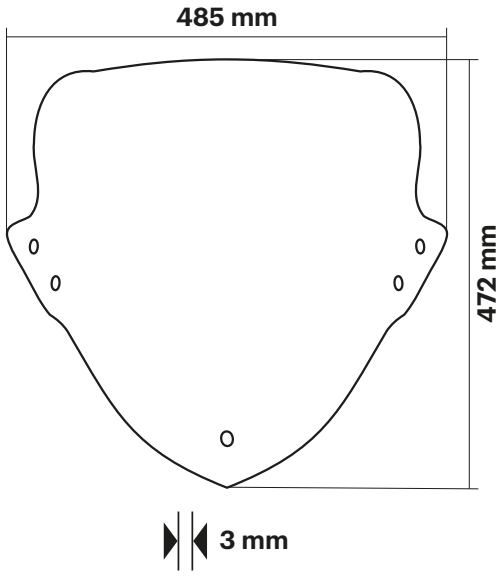

KYMCO
DINK STREET 125 IE 4T LC EURO 3 (SK25)
DINK STREET 200 IE 4T LC EURO 3 (SK40)
DINK STREET 300 IE 4T LC EURO 3 (SK60)
DINK STREET 300 IE 4T LC EURO 3 2012-> (SK60A)
DOWNTOWN 125 IE 4T LC EURO 3 <-2016 (SK25)
DOWNTOWN 200 IE 4T LC EURO 3 (SK40)
DOWNTOWN 300 IE 4T LC EURO 3 (SK60)
DOWNTOWN 300 IE 4T LC EURO 3 2012-> (SK60A)
NIKITA 200 IE 4T LC EURO 3
NIKITA 300 IE 4T LC EURO 3
SUPER DINK 125 IE 4T LC EURO 3 <-2016 (SK25)
SUPER DINK 200 IE 4T LC EURO 3 (SK40)
SUPER DINK 300 IE 4T LC EURO 3 (SK60)
SUPER DINK 300 IE 4T LC EURO 3 2012-> (SK60A)



4515118

FUMÉ CHIARO
LIGHT SMOKE

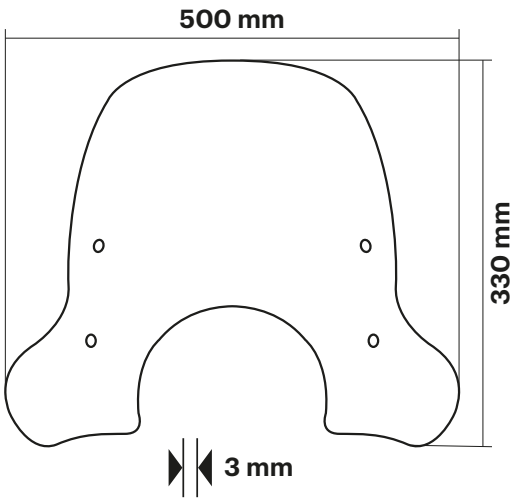

VESPA
GRANTURISMO L - GT 125 4T LC (LEADER)
GRANTURISMO L - GT 200 4T LC (M312M)
GTS 125 4T LC EURO 3 <-2013 (M315M)
GTS 125 IE 4T LC EURO 4 2017->2020
GTS 125 IE 4T LC EURO 5 2021->2022
GTS 150 IE 4T LC EURO 4 2017->2020
GTS 250 IE 4T LC
GTS 300 IE 4T LC EURO 4 2017->2018 (MA33M)
GTS HPE 300 IE 4T LC EURO 4 2019->2020 (MA36M)
GTS HPE 300 IE 4T LC EURO 5 2021->2022 (MD31M)
GTS SUPER 125 IE 4T LC EURO 3 <-2013 (M455M)
GTS SUPER 125 IE 4T LC EURO 3 2014->2016 (M455M)
GTS SUPER 125 IE 4T LC EURO 4 2017->2020
GTS SUPER 125 IE 4T LC EURO 5 2021->2022
GTS SUPER 150 IE 4T LC EURO 4 2017->2020
GTS SUPER 300 IE 4T LC EURO 3 <-2013 (QUASAR M454M)
GTS SUPER 300 IE 4T LC EURO 3 2014->2016 (QUASAR M454M)
GTS SUPER 300 IE 4T LC EURO 4 2017->2018 (QUASAR M458M-M45EM)
GTS SUPER HPE 300 IE 4T LC EURO 4 2019->2020 (MA36M)
GTS SUPER HPE 300 IE 4T LC EURO 5 2021->2022 (MD31M)
GTS SUPER RACING SIXTIES HPE 300 IE 4T LC EURO 5 2021->2022 (MD31M)
GTS SUPER SPORT HPE 300 IE 4T LC EURO 4 2019->2020 (MA36M)
GTS SUPER SPORT HPE 300 IE 4T LC EURO 5 2021->2022 (MD31M)
GTS SUPER TECH HPE 300 IE 4T LC EURO 4 2019->2020 (MA36M)
GTS SUPER TECH HPE 300 IE 4T LC EURO 5 2021->2022 (MD31M)
GTS TOURING HPE 300 IE 4T LC EURO 4 2019->2020 (MA36M)
GTS TOURING HPE 300 IE 4T LC EURO 5 2021->2022 (MD31M)



4515120

FUMÉ CHIARO
LIGHT SMOKE

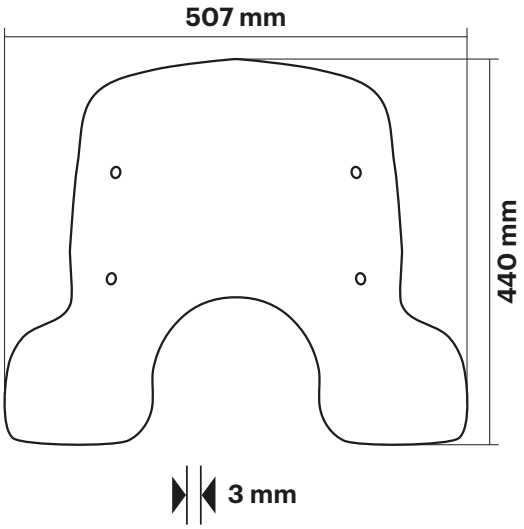

LML
STAR 125 2T
STAR 150 2T
STAR DELUXE 125 4T (E25)
STAR DELUXE 150 4T (E25)

VESPA
PX 125 2T EURO 0-1
PX 125 2T EURO 2 (VLX2M)
PX 125 2T EURO 3
PX 150 2T EURO 0-1
PX 150 2T EURO 2 (VLX2M)
PX 150 2T EURO 3
PX 80 2T
PX E 200 2T



4515122

NEUTRO
CLEAR

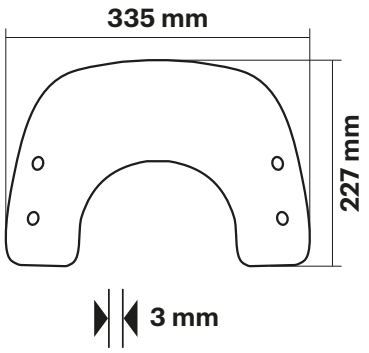

LML
STAR 125 2T
STAR 150 2T
STAR DELUXE 125 4T (E25)
STAR DELUXE 150 4T (E25)

VESPA
PX 125 2T EURO 0-1
PX 125 2T EURO 2 (VLX2M)
PX 125 2T EURO 3
PX 150 2T EURO 0-1
PX 150 2T EURO 2 (VLX2M)
PX 150 2T EURO 3
PX 80 2T
PX E 200 2T



4515124

FUMÉ SCURO
DARK SMOKE

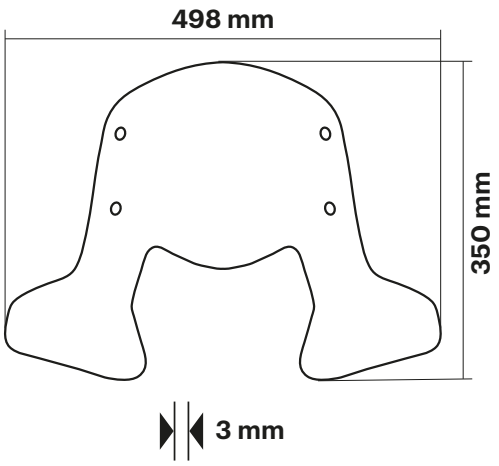

HONDA
SH I 300 IE 4T LC EURO 3 2011->2014 (NF02E)



4515359

FUMÉ SCURO
DARK SMOKE

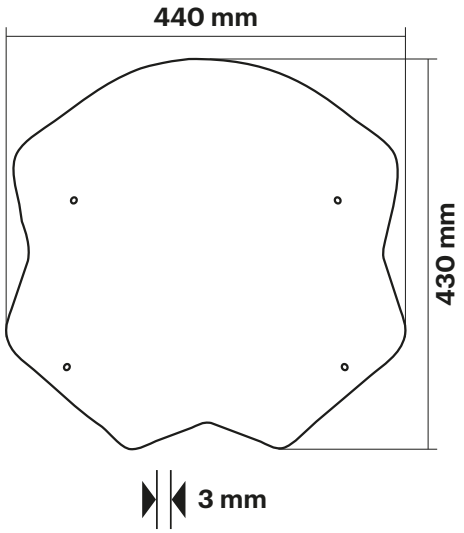

YAMAHA
T MAX 530 IE 4T LC 2012->2014 (J409E)
T MAX 530 IE 4T LC 2015->2016 (J409E)



4515361

FUMÉ SCURO
DARK SMOKE

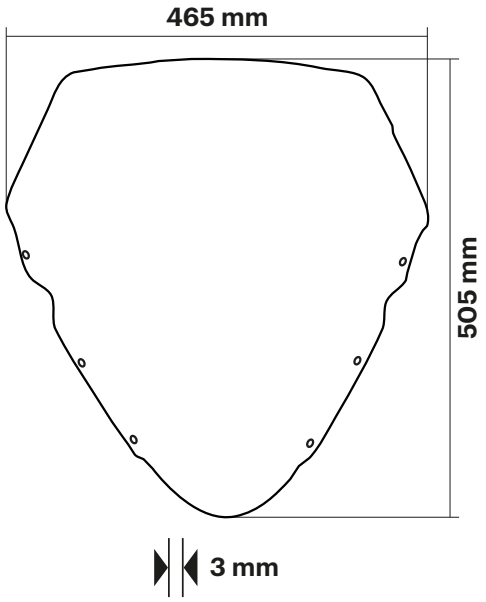

YAMAHA
T MAX (CARB.) 500 4T LC 2001->2003
T MAX 500 IE 4T LC 2004->2007



4515571B

FUMÉ SCURO
DARK SMOKE

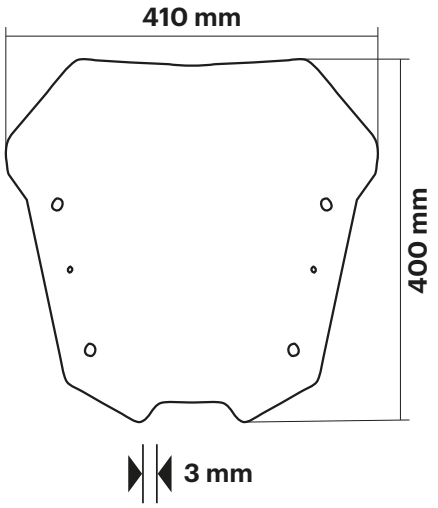

BMW
C 600 SPORT IE 4T LC EURO 3 <-2015
C 650 SPORT IE 4T LC EURO 4 2016-> (652EA)



4515621B

FUMÉ SCURO
DARK SMOKE

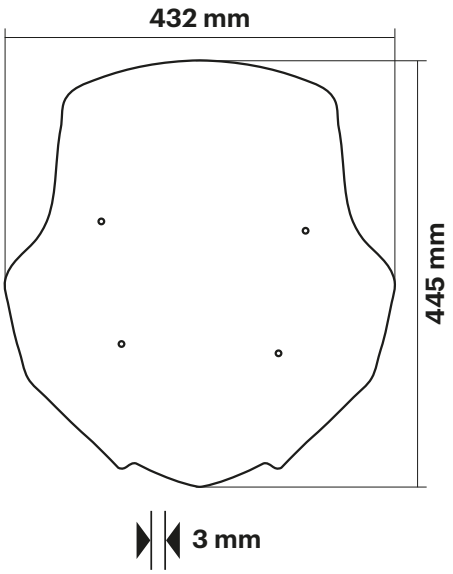

HONDA
INTEGRA 700 IE 4T LC
INTEGRA 750 IE 4T LC



4516051B

FUMÉ SCURO
DARK SMOKE

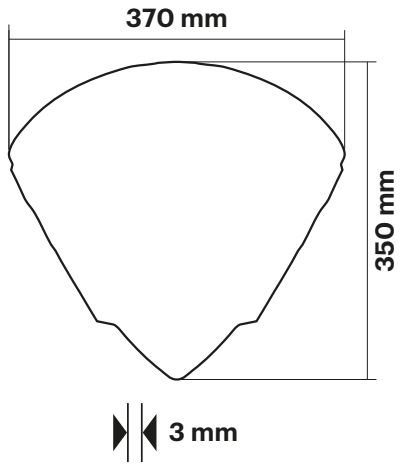

MBK
EVOLIS 250 IE 4T LC 2014->
EVOLIS 400 IE 4T LC

YAMAHA
X MAX 125 IE 4T LC EURO 3 2014->2016 (E3M1E)
X MAX 125 IE 4T LC EURO 4 2017 (E3V9E)
X MAX 250 IE 4T LC EURO 3 2014->2017 (G3B3E)
X MAX 400 IE 4T LC EURO 3 <-2016 (H330E)



4516053

FUMÉ SCURO
DARK SMOKE

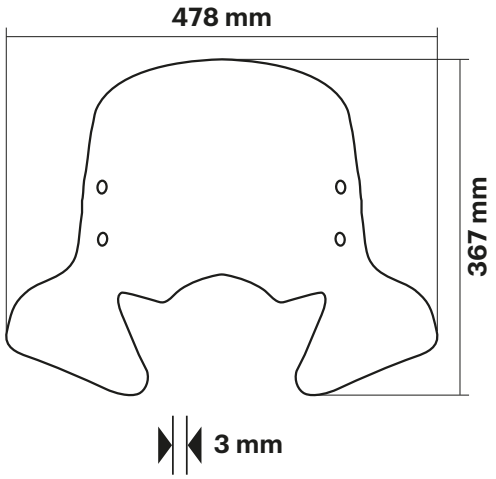

HONDA
SH I ABS 125 IE 4T LC EURO 3 2013->2016 (JF41E)
SH I ABS 150 IE 4T LC EURO 3 2013->2016 (KF13E)



4516054

FUMÉ CHIARO
LIGHT SMOKE

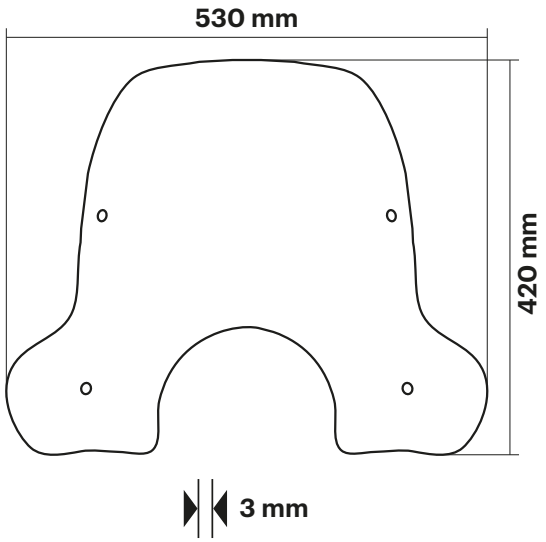

VESPA
LX 125 4T EURO 2 2006->2007 (LEADER M441M)
LX 125 IE 4T EURO 3 2007->2011 (LEADER M443M)
LX 150 4T (LEADER)
LX 150 IE 4T EURO 3 (LEADER)
LX 3V 125 IE 4T EURO 3 2012-> (M687M)
LX 3V 150 IE 4T EURO 3 2012-> (M688M)
LX 50 2T
LX 50 4T



4516055

FUMÉ SCURO
DARK SMOKE

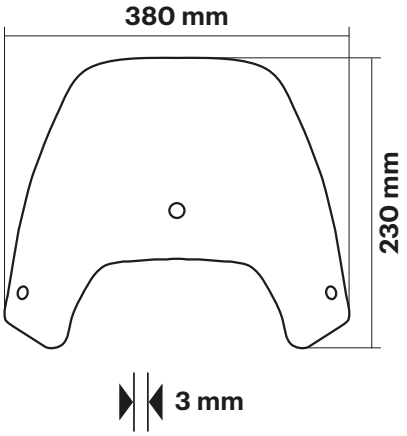

PIAGGIO
BEVERLY 300 IE 4T LC EURO 3 2010->2016 (M692M)
BEVERLY 300 IE 4T LC EURO 4 2017->2020 (MA21M)
BEVERLY SPORT TOURING 350 IE 4T LC EURO 3 <-2016 (M693M)
BEVERLY SPORT TOURING 350 IE 4T LC EURO 4 2017->



4516328

FUMÉ SCURO
DARK SMOKE

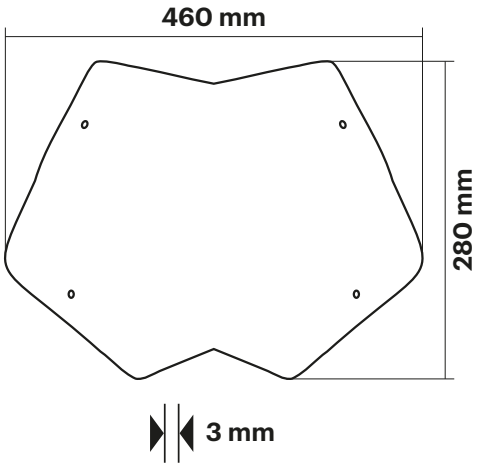

YAMAHA
T MAX 530 IE 4T LC 2012->2014 (J409E)
T MAX 530 IE 4T LC 2015->2016 (J409E)



4516330B

FUMÉ SCURO
DARK SMOKE

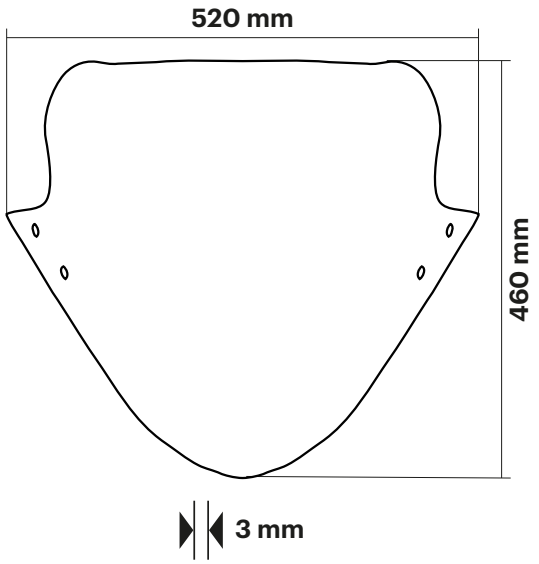

KAWASAKI
J 125 IE 4T LC EURO 3 <-2016 (WS25)
J 125 IE 4T LC EURO 4 2017->
J 300 IE 4T LC EURO 3 (WS60)
J 300 IE 4T LC EURO 4 2018-> (WS60B)



4516332

FUMÉ CHIARO
LIGHT SMOKE

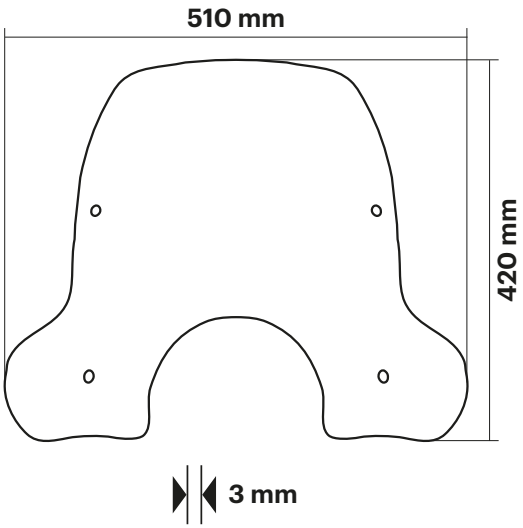

VESPA
ELETTRICA 45 KM/H 2019-> (CB01E)
PRIMAVERA 3V 125 IE 4T EURO 3 2014->2015 (M811M)
PRIMAVERA 3V 150 IE 4T EURO 3 2014->2015 (M812M)
PRIMAVERA 3V IGET 50 IE 4T EURO 4 2018->2020 (CA03M)
PRIMAVERA 3V IGET 50 IE 4T EURO 5 2021->2023 (CD01M)
PRIMAVERA 3V IGET 50 IE 4T EURO 5 2024->
PRIMAVERA 4V 50 4T EURO 2 (C532M)
PRIMAVERA 50 2T EURO 2 (C533M)
PRIMAVERA BATIK IGET 125 IE 4T EURO 5+ 2025->
PRIMAVERA IGET 125 IE 4T EURO 4 2016->2020
PRIMAVERA IGET 125 IE 4T EURO 5 2021->2023 (MD11M)
PRIMAVERA IGET 125 IE 4T EURO 5+ 2024-> (MD13M)
PRIMAVERA IGET 150 IE 4T EURO 4 2016->2020
PRIMAVERA IGET 150 IE 4T EURO 5 2021->2023 (MD12M)
PRIMAVERA RED IGET 125 IE 4T EURO 5+ 2025->
PRIMAVERA S 3V IGET 50 IE 4T EURO 5 2024->
PRIMAVERA S IGET 125 IE 4T EURO 5+ 2025->
PRIMAVERA TECH 3V IGET 50 IE 4T EURO 5 2024->
PRIMAVERA TECH IGET 125 IE 4T EURO 5+ 2025->
SPRINT IGET 150 IE 4T EURO 5 2021->2023



4516342

FUMÉ CHIARO
LIGHT SMOKE

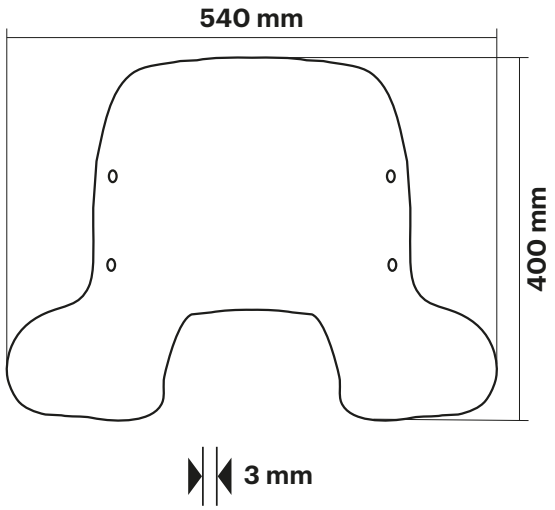

VESPA
SPRINT 3V 125 IE 4T EURO 3 2014->2015
SPRINT 3V 150 IE 4T EURO 3 2014->
SPRINT 3V IGET 50 IE 4T EURO 4 2018->2020 (CA01M)
SPRINT 3V IGET 50 IE 4T EURO 5 2021->2023 (CD01M)
SPRINT 4V 50 4T EURO 2
SPRINT 50 2T EURO 2
SPRINT IGET 125 IE 4T EURO 4 2016->2020 (MA13M)
SPRINT IGET 125 IE 4T EURO 5 2021->2023 (MD11M)
SPRINT IGET 150 IE 4T EURO 4 2016->2020
SPRINT S 3V IGET 50 IE 4T EURO 5 2024->
SPRINT S IGET 125 IE 4T EURO 5+ 2024->



4516502

FUMÉ SCURO
DARK SMOKE

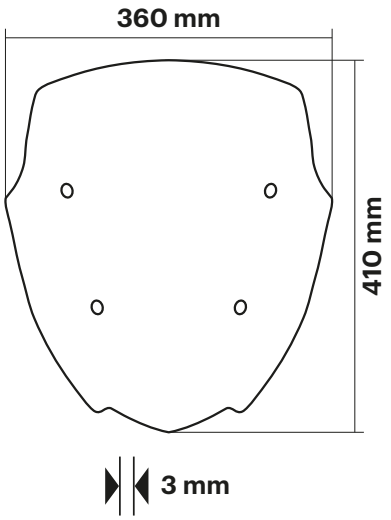

YAMAHA
MAJESTY S 125 IE 4T LC
SMAX 160 IE 4T LC



4517070

FUMÉ SCURO
DARK SMOKE

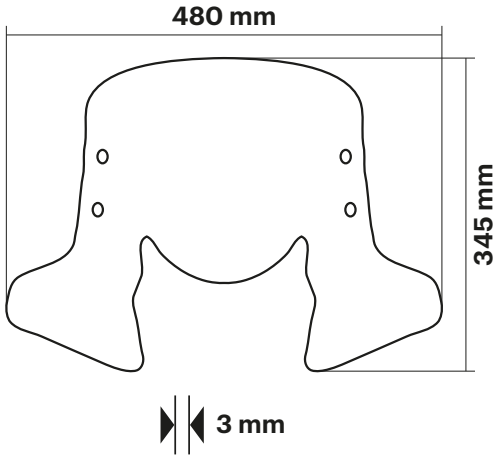

HONDA
SH I 300 IE 4T LC EURO 4 2015->2017 (NF05E)
SH I 300 IE 4T LC EURO 4 2018->



4517073

FUMÉ SCURO
DARK SMOKE

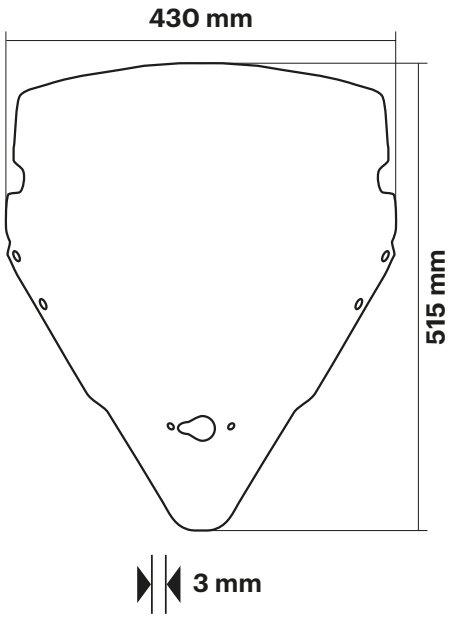

KYMCO
DOWNTOWN 125 IE 4T LC EURO 4 2017-> (SK25E)
DOWNTOWN I ABS 350 IE 4T LC EURO 4 2016->2020 (SK64G)
DOWNTOWN I ABS 350 IE 4T LC EURO 5 2021-> (SK64H)
SUPER DINK 125 IE 4T LC EURO 4 2017-> (SK25E)
SUPER DINK 350 IE 4T LC EURO 4 2017-> (SK64G)



4517366

FUMÉ SCURO
DARK SMOKE

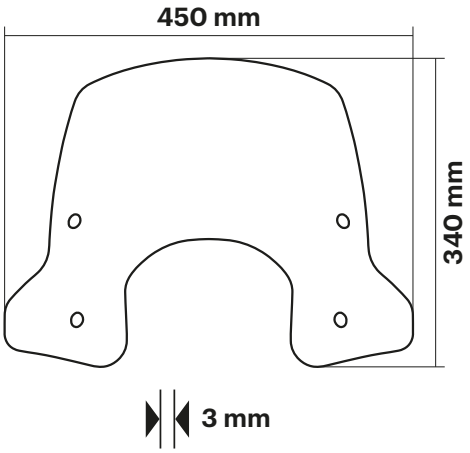

PIAGGIO
LIBERTY 3V IGET 50 IE 4T EURO 5 2021-> (CD11M)
LIBERTY IGET 125 IE 4T EURO 4 2017->2020
LIBERTY IGET 125 IE 4T EURO 5 2021->2024 (MD41M)
LIBERTY IGET 150 IE 4T EURO 4 2017->2020
LIBERTY IGET 150 IE 4T EURO 5 2021->2024 (MD42M)
LIBERTY IGET 50 IE 4T EURO 3 2016->2017 (C541M)
LIBERTY IGET 50 IE 4T EURO 4 2018->2020 (CA11M)
LIBERTY IGET ABS 125 IE 4T EURO 3 (M893M)
LIBERTY IGET ABS 150 IE 4T EURO 3
LIBERTY S IGET 125 IE 4T EURO 4 2017->2020
LIBERTY S IGET 125 IE 4T EURO 5 2021->2024 (MD41M)
LIBERTY S IGET 150 IE 4T EURO 4 2017->2020



4517448

FUMÉ SCURO
DARK SMOKE

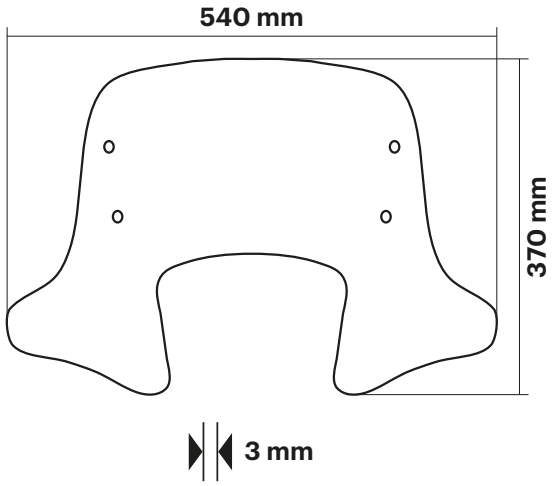

PIAGGIO
MEDLEY 125 IE 4T LC EURO 4 2016->2019 (MA01M)
MEDLEY 150 IE 4T LC EURO 4 2016->2019



4517457

FUMÉ SCURO
DARK SMOKE

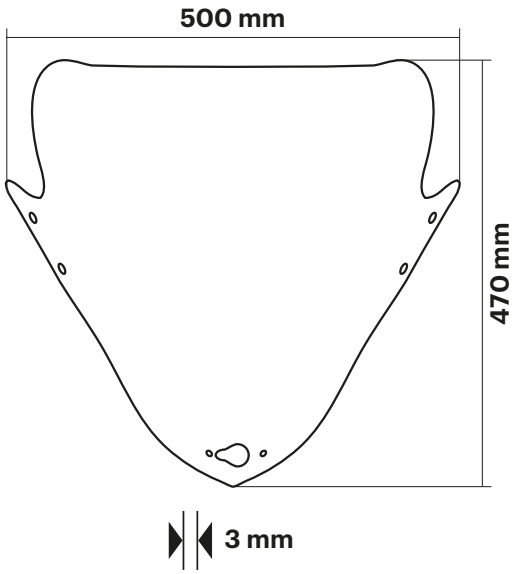

KYMCO
GRAND DINK 125 IE 4T LC EURO 4 2017-> (KS25A)
GRAND DINK 300 IE 4T LC EURO 4 2017-> (KS60A)
X-TOWN 125 IE 4T LC EURO 4 <-2020 (KS25A)
X-TOWN 125 IE 4T LC EURO 5 2021-> (KS25B)
X-TOWN 300 IE 4T LC EURO 4 2016->2020 (KS60A)



4517729

FUMÉ SCURO
DARK SMOKE

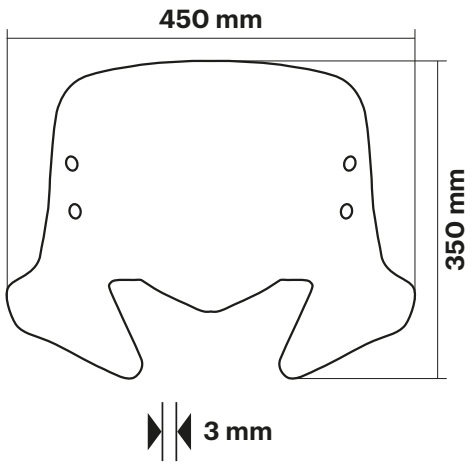

HONDA
SH I ABS 125 IE 4T LC EURO 4 2017->2019 (JFG8E)
SH I ABS 150 IE 4T LC EURO 4 2017->2019



4517810

FUMÉ SCURO
DARK SMOKE

YAMAHA
T MAX 500 IE 4T LC 2008->2011

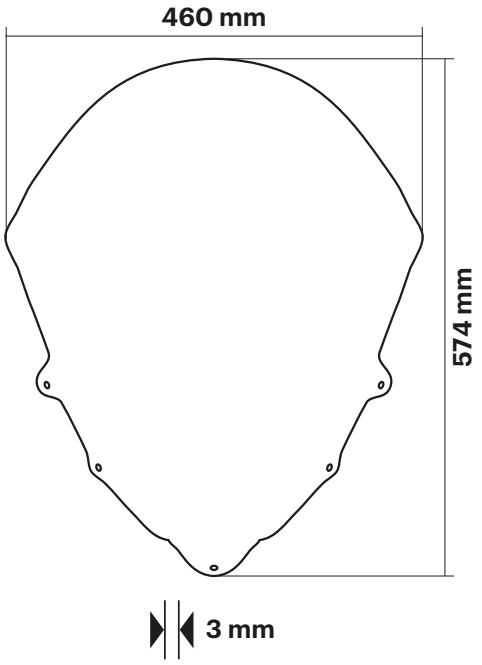



4517837

FUMÉ SCURO
DARK SMOKE

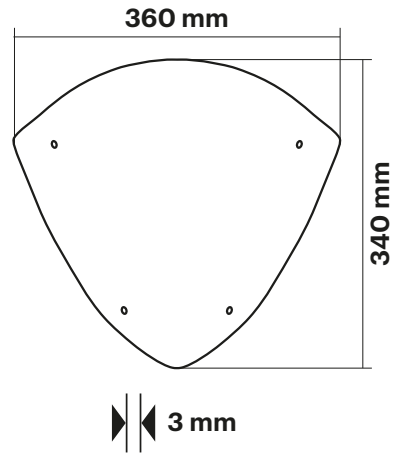

YAMAHA
X MAX 125 IE 4T LC EURO 4 2018->2020 (E31LE)
X MAX 125 IE 4T LC EURO 5 2021->2022 (E33FE)
X MAX 250 IE 4T LC 2021-> APAC
X MAX 300 IE 4T LC EURO 4 2017->2020 (H336E)
X MAX 300 IE 4T LC EURO 5 2021->2022
X MAX 400 IE 4T LC EURO 4 2017->2019 (H340E)
X MAX TECH MAX 300 IE 4T LC EURO 5 2021->2022
X MAX TECH MAX 400 IE 4T LC EURO 4 2019->2021 (H340E)



4517841B

FUMÉ SCURO
DARK SMOKE

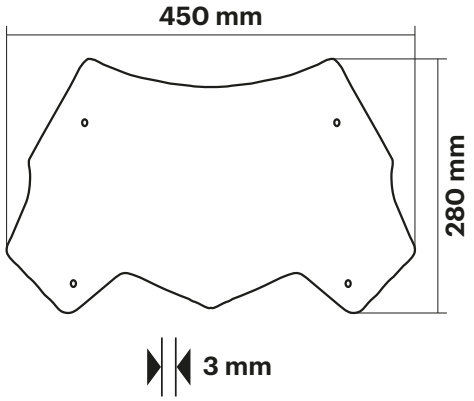

YAMAHA
T MAX 530 IE 4T LC EURO 4 2017-> (J415E)
T MAX 560 IE 4T LC EURO 5 2020->2021 (J420E)
T MAX DX 530 IE 4T LC EURO 4 2017-> (J415E)
T MAX SX 530 IE 4T LC EURO 4 2017-> (J415E)
T MAX TECH MAX 560 IE 4T LC EURO 5 2020->2021 (J420E)



4517844

FUMÉ SCURO
DARK SMOKE

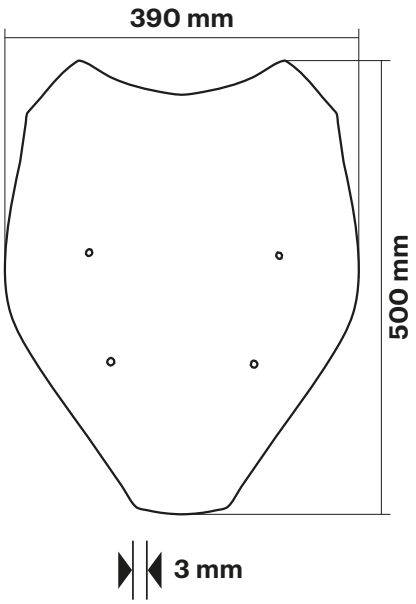

KYMCO
AK 550 IE 4T LC EURO 4 2017->2020 (SAA1)
AK 550 IE 4T LC EURO 5 2021-> (SBA1)



4517875

FUMÉ SCURO
DARK SMOKE

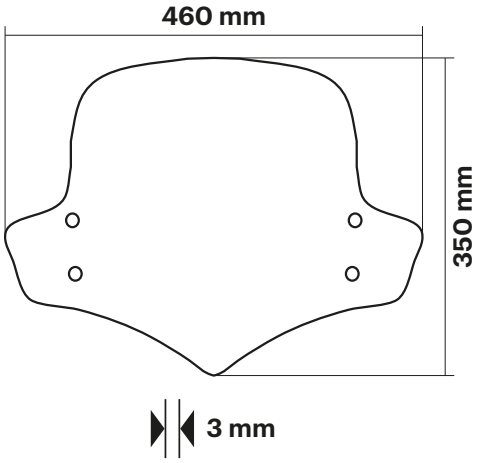

KYMCO
AGILITY R16 + 125 IE 4T EURO 4 <-2020 (KL25F)



4518330B

FUMÉ SCURO
DARK SMOKE

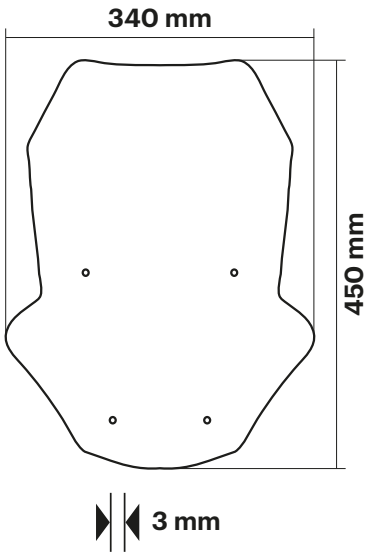

HONDA
X-ADV 750 IE 4T LC EURO 4 2017
X-ADV 750 IE 4T LC EURO 4 2018->2020



4518331

FUMÉ SCURO
DARK SMOKE

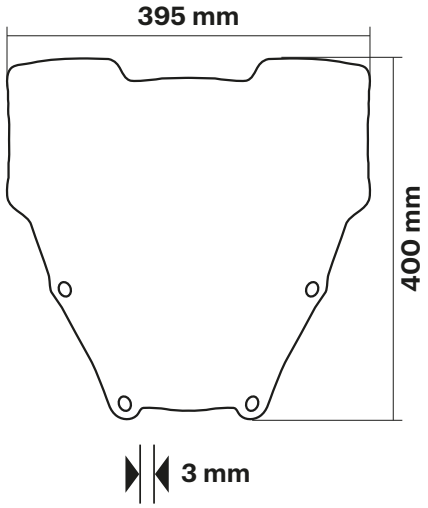

HONDA
FORZA 125 IE 4T LC EURO 3 <-2016 (JF60E)
FORZA 125 IE 4T LC EURO 4 2017->2020 (JF69E)
FORZA 300 IE 4T LC EURO 4 2018->2020 (NF07E)



4518351B

FUMÉ SCURO
DARK SMOKE

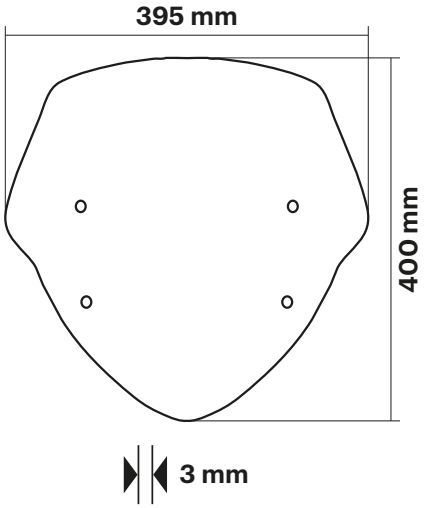

PIAGGIO
MP3 350 IE 4T LC EURO 4 2018-> (TA14M)
MP3 SPORT 400 IE 4T LC EURO 5 2021->2024
MP3 SPORT 400 IE 4T LC EURO 5+ 2025->



4518354

FUMÉ SCURO
DARK SMOKE

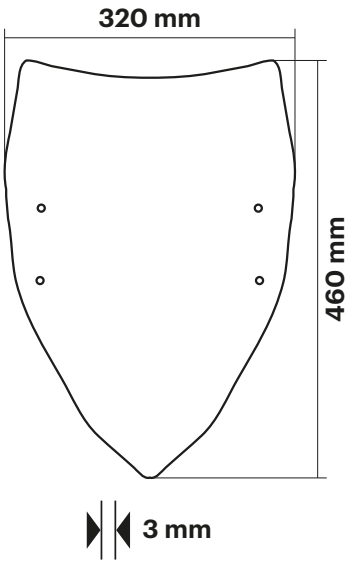

KYMCO
XCITING 400I S 400 IE 4T LC EURO 4 2018->2020 (SK80C)
XCITING 400I S 400 IE 4T LC EURO 5 2021-> (SK80D)
XCITING VS 400 IE 4T LC EURO 5 2023->



4518407

FUMÉ SCURO
DARK SMOKE

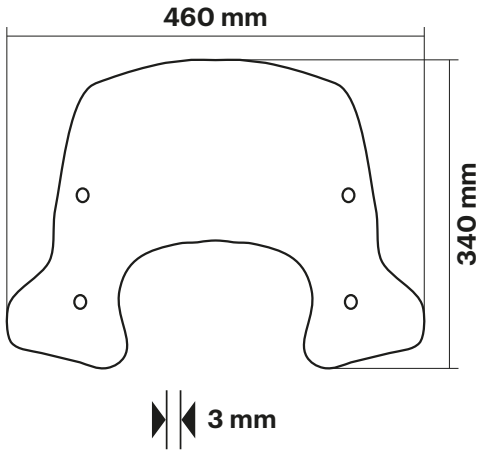

KYMCO
LIKE 50 4T EURO 4 2018->
LIKE CBS 125 IE 4T EURO 4 2018-> (TE 25)
LIKE CBS 150 IE 4T EURO 4 2018->



4518641

FUMÉ SCURO
DARK SMOKE

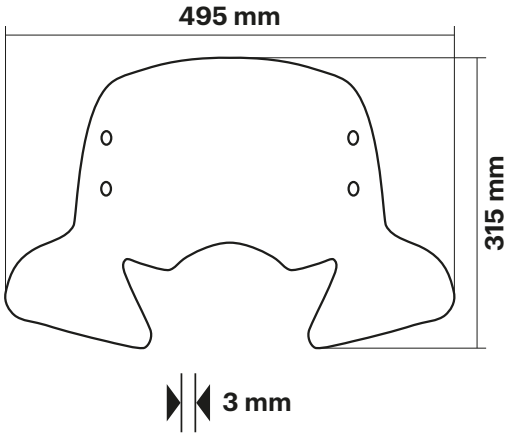

KYMCO
PEOPLE S 300 IE 4T LC EURO 4 2019-> (BF60C)



4518761

FUMÉ SCURO
DARK SMOKE

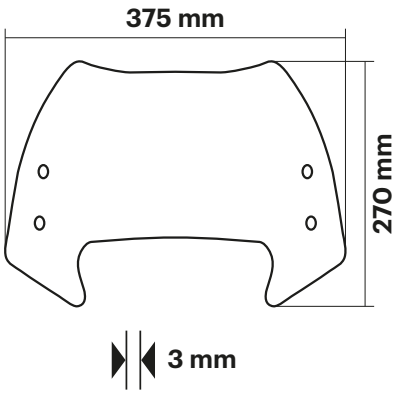

PIAGGIO
MEDLEY 125 IE 4T LC EURO 4 2020-> (MB01M)
MEDLEY 125 IE 4T LC EURO 5 2021->2024 (MD01M)
MEDLEY 125 IE 4T LC EURO 5+ 2025->
MEDLEY 150 IE 4T LC EURO 4 2020->
MEDLEY 150 IE 4T LC EURO 5 2021->2024 (MD02M)
MEDLEY 200 IE 4T LC EURO 5+ 2025->
MEDLEY S 125 IE 4T LC EURO 4 2020-> (MB01M)
MEDLEY S 125 IE 4T LC EURO 5 2021->2024 (MD01M)
MEDLEY S 125 IE 4T LC EURO 5+ 2025->
MEDLEY S 150 IE 4T LC EURO 4 2020->
MEDLEY S 150 IE 4T LC EURO 5 2021->2024 (MD02M)
MEDLEY S 200 IE 4T LC EURO 5+ 2025->



4518766

FUMÉ SCURO
DARK SMOKE

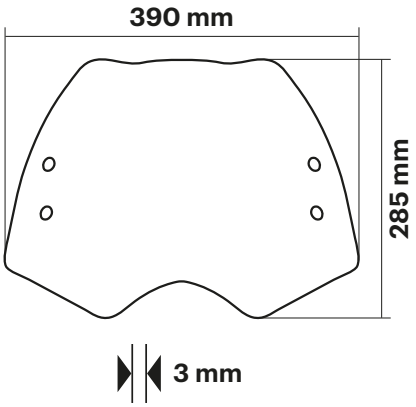

HONDA
SH I ABS 125 IE 4T LC EURO 5 2020->2023 (JF90E)
SH I ABS 125 IE 4T LC EURO 5+ 2024-> (JF90E)
SH I ABS 150 IE 4T LC EURO 5 2020->2023
SH I ABS 150 IE 4T LC EURO 5+ 2024-> (KF40E)



4519021

FUMÉ SCURO
DARK SMOKE

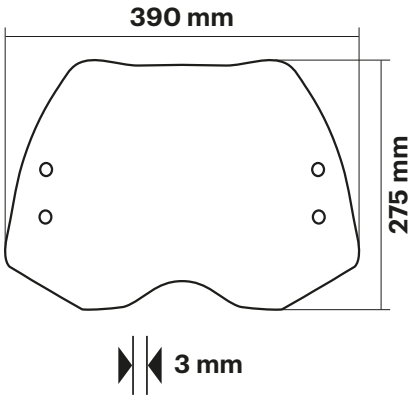

HONDA
SH I 350 IE 4T LC EURO 5 2021->2022 (NF11E)
SH I 350 IE 4T LC EURO 5 2023->2024 (NF11E)
SH I 350 IE 4T LC EURO 5+ 2025->



4519027

FUMÉ SCURO
DARK SMOKE

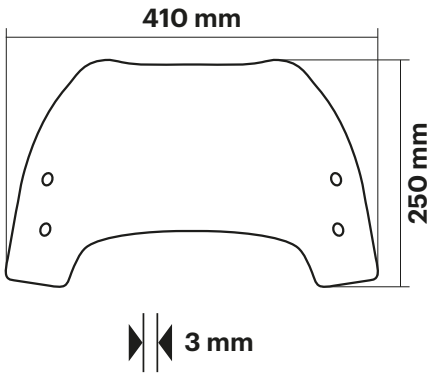

PIAGGIO
BEVERLY HPE 300 IE 4T LC EURO 5 2021-> (MD21M)
BEVERLY HPE 400 IE 4T LC EURO 5 2021->2024 (MD22M)
BEVERLY HPE 400 IE 4T LC EURO 5+ 2025->
BEVERLY S HPE 400 IE 4T LC EURO 5+ 2025->



4519043B

FUMÉ SCURO
DARK SMOKE

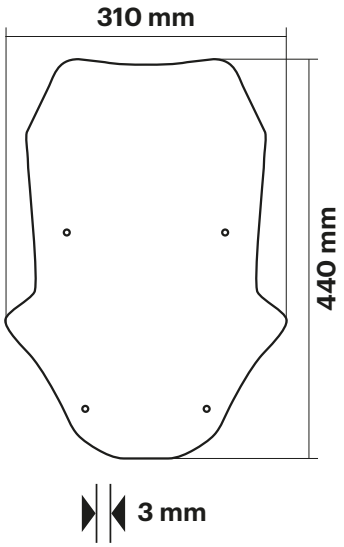

HONDA
X-ADV 750 IE 4T LC EURO 5 2021->2024
X-ADV 750 IE 4T LC EURO 5+ 2025->



4519189

FUMÉ SCURO
DARK SMOKE

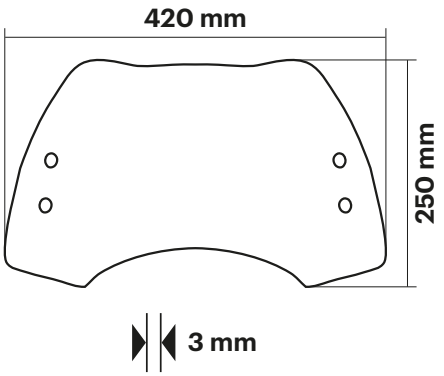

KYMCO
LIKE S 125 IE 4T LC EURO 5 2021-> (TE25)



4519193

FUMÉ SCURO
DARK SMOKE

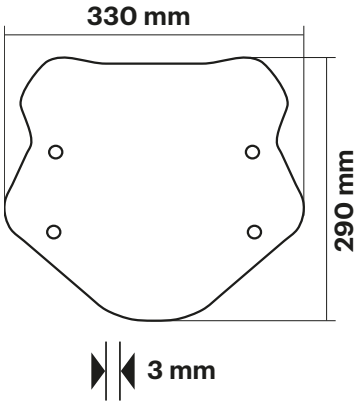

KYMCO
DT X360 125 IE 4T LC EURO 5 2022-> (SK25S)
DT X360 350 IE 4T LC EURO 5 2021-> (SK64D)



4519198

FUMÉ SCURO
DARK SMOKE

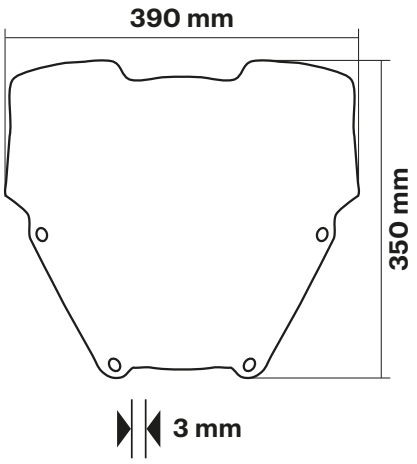

HONDA
FORZA 125 IE 4T LC EURO 5 2021->2024 (JK02E)
FORZA 125 IE 4T LC EURO 5+ 2025->
FORZA 350 IE 4T LC EURO 5 2021->2024 (NF09E)
FORZA 350 IE 4T LC EURO 5+ 2025->



4519199B

FUMÉ SCURO
DARK SMOKE

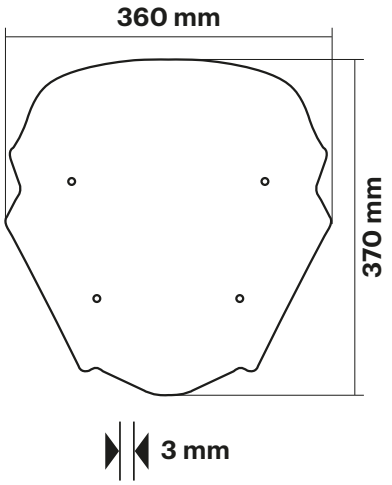

HONDA
FORZA 750 IE 4T LC EURO 5 2021->2024



4519416B

FUMÉ SCURO
DARK SMOKE

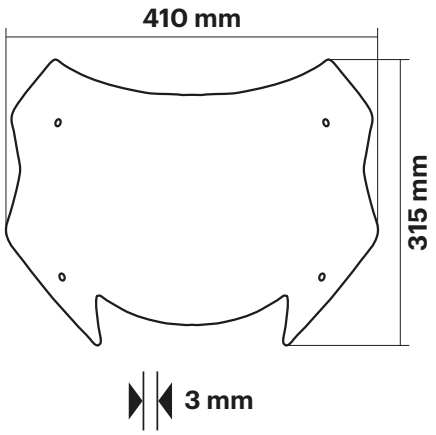

YAMAHA
T MAX 560 IE 4T LC EURO 5 2022->2024
T MAX TECH MAX 560 IE 4T LC EURO 5 2022->2024



4519573B

FUMÉ SCURO
DARK SMOKE

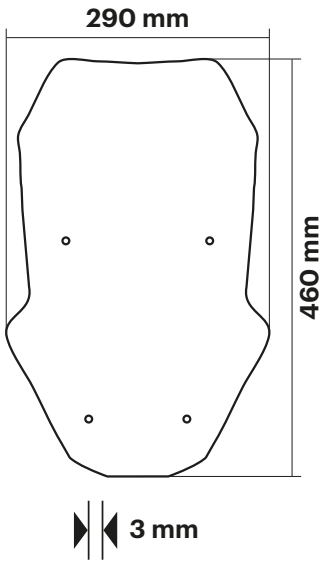

HONDA
ADV 350 IE 4T LC EURO 5 2021->2024 (NF13E)
ADV 350 IE 4T LC EURO 5+ 2025->



4519683

FUMÉ CHIARO
LIGHT SMOKE

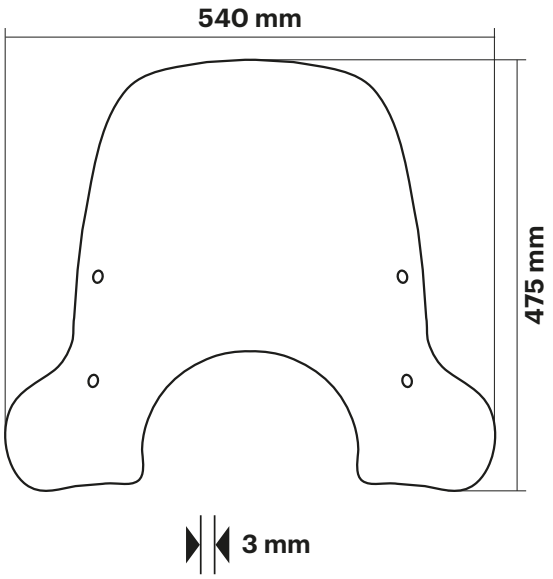

VESPA
GTS 125 IE 4T LC EURO 5 2023->
GTS 310 IE 4T LC EURO 5+ 2025-> (MD38M)
GTS HPE 300 IE 4T LC EURO 5 2023-> (MD31M)
GTS SUPER 125 IE 4T LC EURO 5 2023->
GTS SUPER 310 IE 4T LC EURO 5+ 2025-> (MD38M)
GTS SUPER HPE 300 IE 4T LC EURO 5 2023-> (MD31M)
GTS SUPER SPORT 125 IE 4T LC EURO 5 2023->
GTS SUPER SPORT 310 IE 4T LC EURO 5+ 2025-> (MD38M)
GTS SUPER SPORT HPE 300 IE 4T LC EURO 5 2023->
GTS SUPER TECH 125 IE 4T LC EURO 5 2023->
GTS SUPER TECH HPE 300 IE 4T LC EURO 5 2023->



4519755B

FUMÉ SCURO
DARK SMOKE

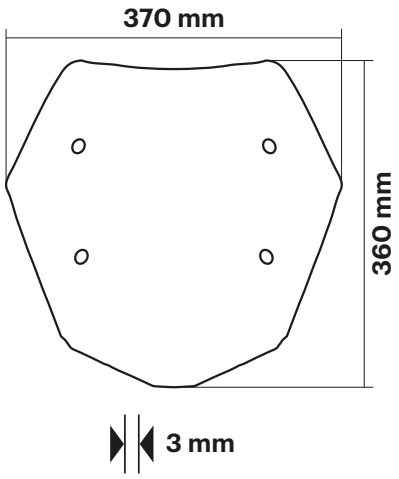

VOGE
SFIDA SR4 400 IE 4T LC EURO 5 2023-> (LX1P80MP)
SFIDA SR4 MAX 400 IE 4T LC EURO 5 2023-> (LX1P80MP)



4519772B

FUMÉ SCURO
DARK SMOKE

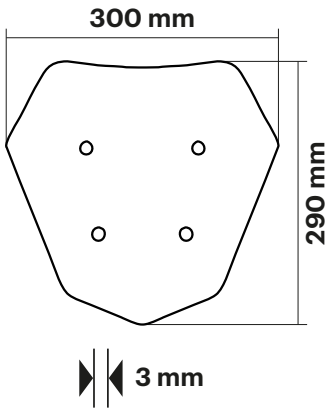

APRILIA
SR GT SPORT 125 IE 4T LC EURO 5 2022->2024 (MD51M)
SR GT SPORT 200 IE 4T LC EURO 5 2022->2024



4519802

FUMÉ SCURO
DARK SMOKE

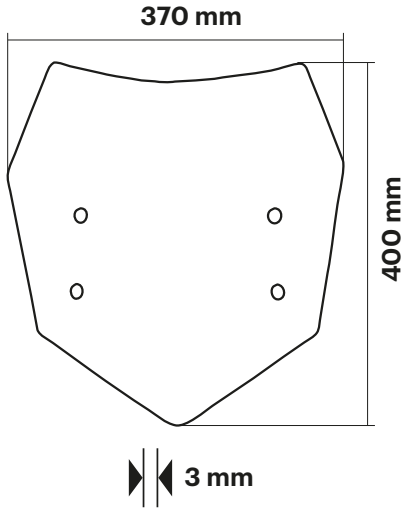

KYMCO
AK PREMIUM 550 IE 4T LC EURO 5 2023-> (SBA1B)



4519877

FUMÉ SCURO
DARK SMOKE

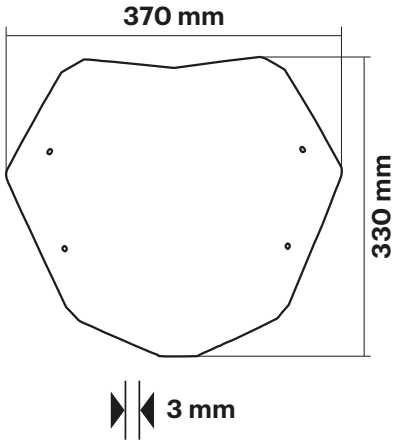

BMW
C 400 X IE 4T LC EURO 5 2021->2024



4519881

FUMÉ SCURO
DARK SMOKE

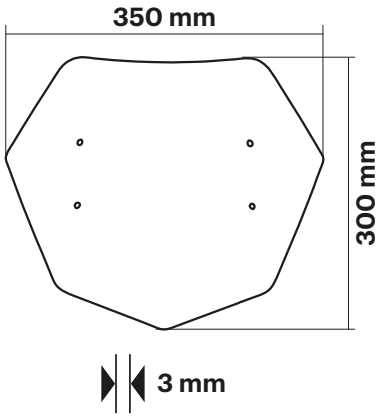

ITALJET
DRAGSTER 125 IE 4T LC EURO 5 2021-> (JC1P58MI-3)
DRAGSTER 200 4T LC EURO 5 2021-> (JC1P63ML-4B)
DRAGSTER 300 IE 4T LC EURO 5 2024-> (AZCR)



4519887

FUMÉ SCURO
DARK SMOKE

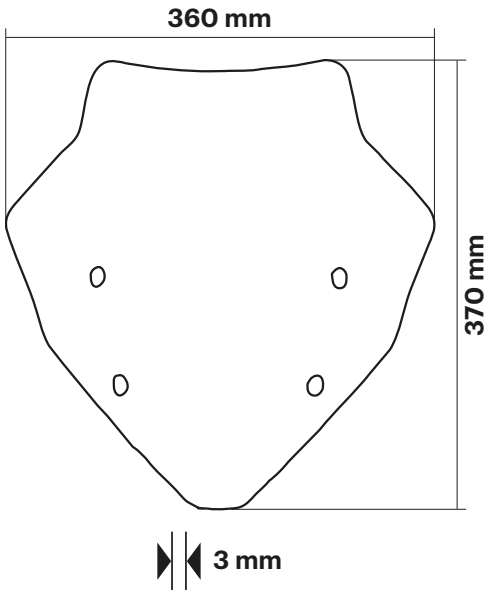

VOGE
SFIDA SR1 125 IE 4T LC EURO 5 2023->2024 (LC1P52MI)



4519948

FUMÉ SCURO
DARK SMOKE

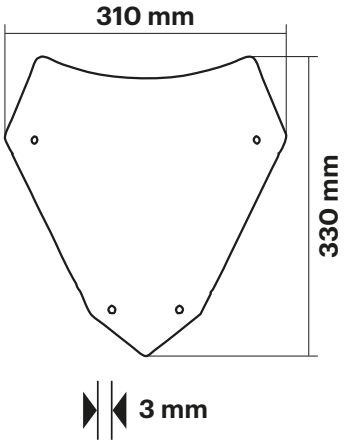

YAMAHA
X MAX 125 IE 4T LC EURO 5 2023->2024
X MAX 300 IE 4T LC EURO 5 2023->2024 (H348E)



4520083

FUMÉ SCURO
DARK SMOKE

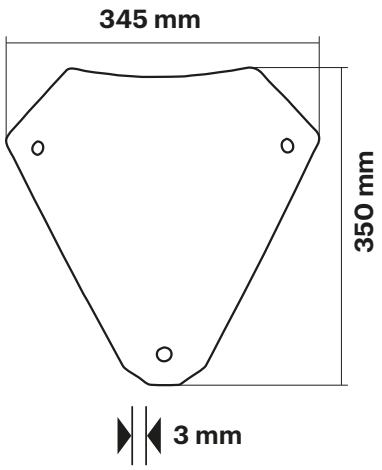

PEUGEOT
XP 400 ALLURE 4T LC IE EURO 5 2023->
XP 400 GT 4T LC IE EURO 5 2023->



4520130

FUMÉ SCURO
DARK SMOKE

KYMCO
DOWNTOWN GT 350 IE 4T LC EURO 5+ 2024->

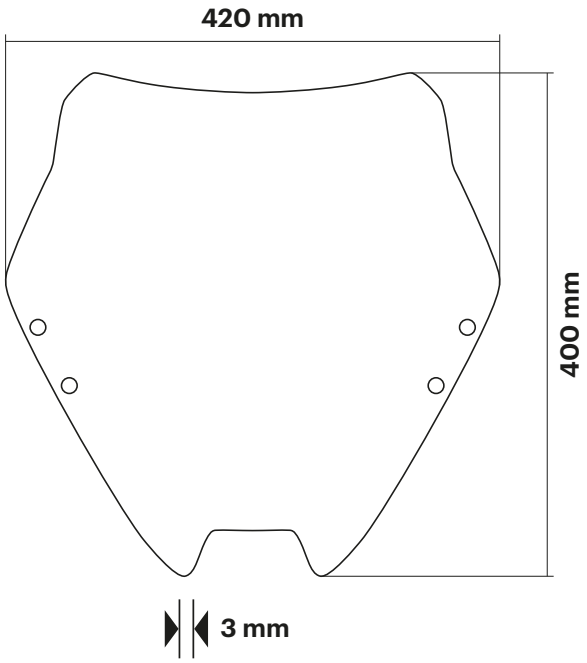



4520210

FUMÉ SCURO
DARK SMOKE

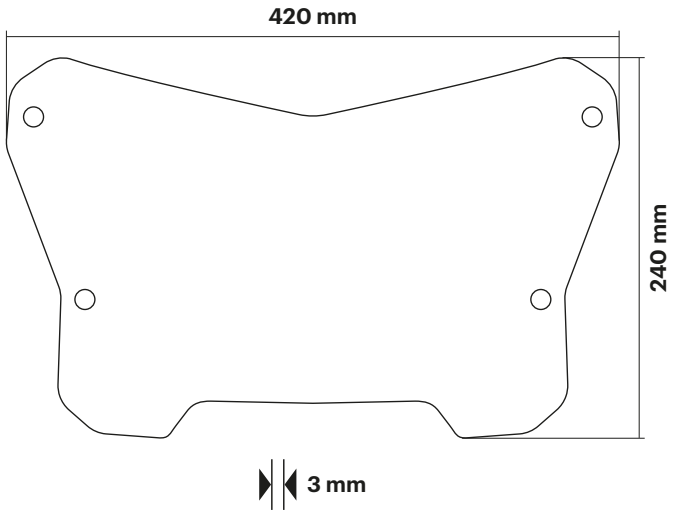

VOGE
SFIDA SR16 125 IE 4T LC EURO 5+ 2025-> (LC1P52MI)



4520232

FUMÉ SCURO
DARK SMOKE

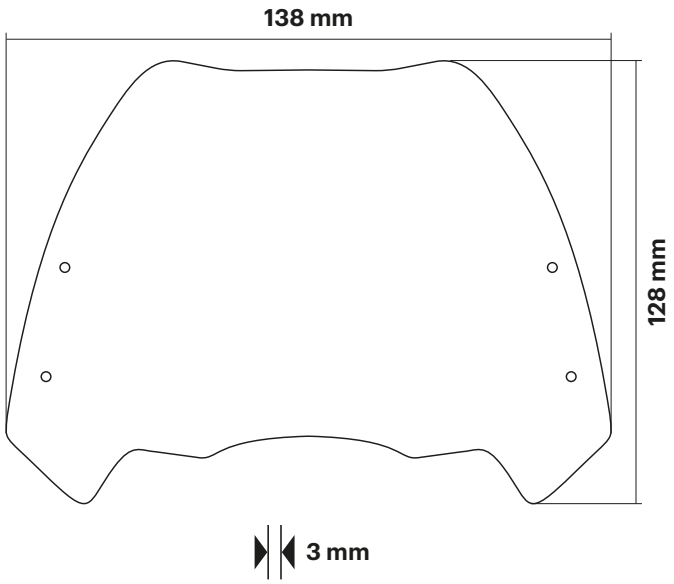

PIAGGIO
LIBERTY IGET 125 IE 4T EURO 5+ 2025-> (MD43M)
LIBERTY IGET 150 IE 4T EURO 5+ 2025-> (MD44M)
LIBERTY S IGET 125 IE 4T EURO 5+ 2025-> (MD43M)
LIBERTY S IGET 150 IE 4T EURO 5+ 2025-> (MD44M)



4520241

FUMÉ SCURO
DARK SMOKE

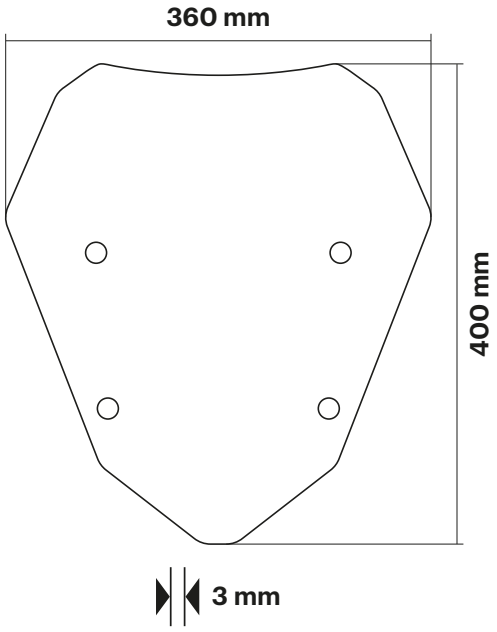

VOGE
SFIDA SR1 ADV 125 IE 4T LC EURO 5+ 2025-> (LC1P52MI)



N° 1

Detergente multiuso antistatico - 100 ml

Antistatic multipurpose cleaner - 100 ml

4319937



Trasforma il tuo mezzo – e il tuo cupolino – in una luccicante *no-fly zone per la polvere*, coccolalo con N° 1.

N° 1 è il detergente multiuso antistatico che sgrassa e pulisce anche lo sporco più ostinato.

Basta una spruzzata e ogni parte della tua moto, scooter, motorino o Vespa brillerà in modo accecante.

Transform your ride – and your windscreen – into a gleaming *no-fly zone for dust*, and pamper it with N° 1.

N° 1 is the antistatic multipurpose cleaner that degreases and cleans even the most persistent grime.

Just one spray and every part of your motorcycle, scooter, moped, or Vespa will shine dazzlingly.

Panno in microfibra Malossi
Malossi microfiber cloth

4220136.RO



Il modo più facile e sicuro per far brillare scooter o moto? Il super assorbente panno in microfibra Malossi che fa sparire polvere, sporco e acqua accarezzando ogni superficie.

Provalo con il nostro detergente multiuso antistatico N°1, funziona ancora meglio!

The easiest and safest way to make your scooter or motorcycle shine? The super absorbent Malossi microfiber cloth that wipes away dust, dirt, and water while gently touching every surface.

Try it with our antistatic multi-purpose cleaner No.1, it works even better!

Caratteristiche tecniche
- Dimensioni: 45x30cm
- Materiale: morbida microfibra 345 gr.
- Stampa: marchio Malossi in colore nero su panno rosso

Technical features
- Dimensions: 45x30cm
- Material: 345 gr. soft microfiber
- Print: black Malossi logo on red cloth

2 Cappucci valvola camera d'aria bianchi per pneumatici
2 Whites plugs for tyre inner tube valve

4213415.WO




ADESIVI
MALOSSI
Malossi stickers

KIT ADESIVI URBAN JUNGLE

Kit of Urban Jungle stickers

3319284

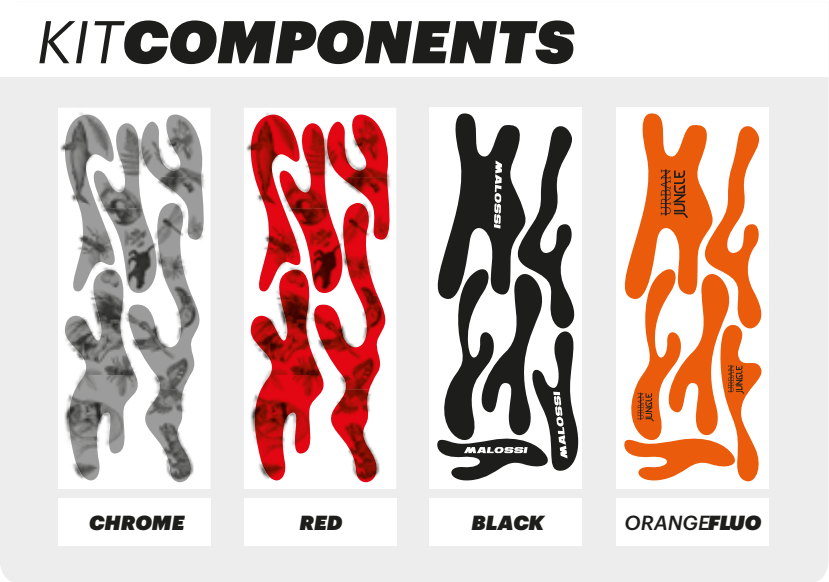

Kit composto da 4 cartelle dimensioni 50 x 23 cm.

"Welcome to the jungle, it gets worse here every day".

In effetti, i Guns&Roses già negli anni 80 ci avevano visto giusto. Ma anche quando tutto ci sembra che stia andando a rotoli, almeno abbiamo il nostro fido destriero sue due ruote. Lui non tradisce. Lui è fido, ma può essere anche molto figo. Siete come noi: avete sempre paura di passare inosservati. Pensando a voi abbiamo pensato a gadget più wild per il vostro mezzo, una volta che avrete modificato tutto il modificabile. Un set di adesivi di altissima qualità per riservargli trattamenti degni del miglior tatuatore.

Kit composed of 4 sheets size 50 x 23 cm.

"Welcome to the jungle, it gets worse here every day".

Indeed, Guns&Roses were already right in the 80s. But even when everything seems to be falling apart, at least we have our trusty steed on two wheels. He does not betray. He is trusty, but he can also be very cool. You are like us: always afraid to go unnoticed. With you in mind, we have thought of wilder gadgets for your vehicle, once you have modified everything that can be modified. A set of top-quality stickers to give it a treatment worthy of the best tattoo artist.



CAMOUFLAGE
COMBO EXAMPLE



KIT ADESIVI PER HONDA SH

Kit of Honda SH stickers

È arrivato il wrapping Malossi per tutti gli Honda SH che dominano la strada.

Il kit di adesivi in PVC ad alta densità e dotato di tecnologia Bubble-Free, include 36 pezzi progettati e dona un boost extra di carattere al tuo scooter.

I colori? Sono quelli di Malossi: rosso e giallo fluo, nero e bianco, così ti farai riconoscere a colpo d'occhio.

Introducing the Malossi wrapping, the new armor for Honda SH that dominates the roads.

The high-density PVC sticker kit, featuring Bubble-Free technology, boasts 36 meticulously designed pieces, transforming your ride into a statement.

And the colours? Real bold Malossi vibes: radiant red, striking fluorescent yellow, classic black, and pure white, so your scooter will turn heads in an instant.

Wrapping Malossi per Honda SH 125i
Malossi wrapping for Honda SH 125i

3320176B



Watch the video



Wrapping Malossi per Honda SH 350i
Malossi wrapping for Honda SH 350i

3320129B



ADESIVI MALOSSI PRESPAZIATI

Pre-spaced Malossi sticker



Adesivo prespaziato leone nero - destro 23 cm

Pre-spaced sticker black lion - right 23 cm

33 9751

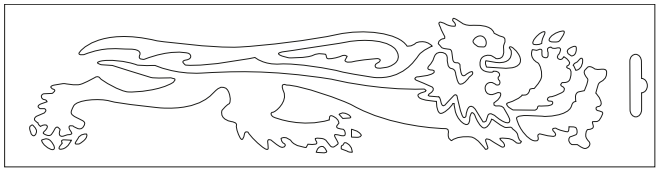

Adesivo prespaziato leone bianco - destro 23 cm

Pre-spaced sticker white lion - right 23 cm

33 9755



Adesivo prespaziato leone nero - sinistro 23 cm

Pre-spaced sticker black lion - left 23 cm

3318828B

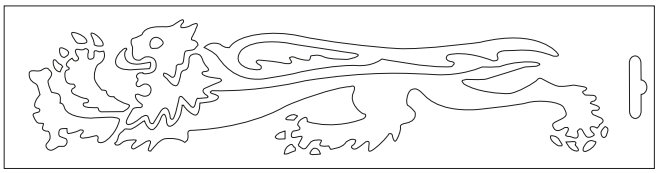

Adesivo prespaziato leone bianco - sinistro 23 cm

Pre-spaced sticker white lion - left 23 cm

33 9756



Adesivo prespaziato Malossi nero - 14 cm

Pre-spaced sticker Malossi black - 14 cm

33 9775

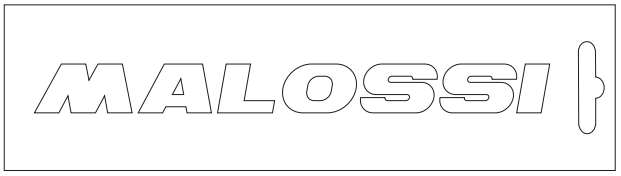

Adesivo prespaziato Malossi bianco - 14 cm

Pre-spaced sticker Malossi white - 14 cm

33 9777.W0

Adesivo prespaziato Malossi nero - 32 cm

Pre-spaced sticker Malossi black - 32 cm

33 7505.B0

Adesivo prespaziato Malossi bianco - 32 cm

Pre-spaced sticker Malossi white - 32 cm

33 7505.W0



Adesivo prespaziato MHR nero - 13 cm

Pre-spaced sticker MHR black - 13 cm

33 9771

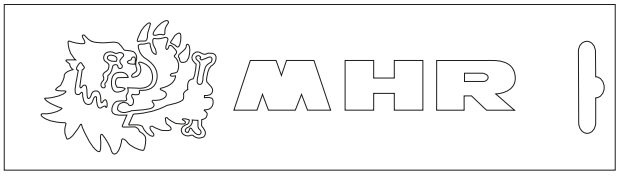

Adesivo prespaziato MHR bianco - 13 cm

Pre-spaced sticker MHR white - 13 cm

33 9773

CARTELLE ADESIVI MALOSSI

Folder of Malossi stickers

Cartella di adesivi assortiti 24,7x35 cm

Folder of matched stickers 24,7x35 cm

33 9780B



Cartella adesivi vintage Malossi fluo 17x25 cm

Folder of fluo Malossi vintage stickers 17x25 cm

3320093



Ce lo avete chiesto e noi lo abbiamo fatto, anzi, rifatto.

Lo storico adesivo Malossi in pvc bianco con i classici **colori fluo** – giallo, arancio e rosso – che ha fatto innamorare generazioni di appassionati, è tornato per personalizzare il tuo mezzo o qualsiasi superficie tu voglia rendere unica.

Caratteristiche:
• Materiale: PVC bianco
• Stampa loghi fluo: giallo, arancio, rosso
• Dimensioni: 25 x 17,5 cm

Attaccalo ovunque e porta lo spirito del leone Malossi sempre con te.

You asked for it, and we did it – or rather, we redid it.

The iconic Malossi sticker in white PVC with the classic **fluo colors** – yellow, orange, and red – that generations of fans have fallen in love with, is back, ready to personalize your ride or any surface you want to make unique.

Features:
• Material: white PVC
• Fluorescent logo print: yellow, orange, red
• Size: 25 x 17,5 cm

Stick it anywhere and carry the Malossi lion spirit with you, always.

MINI CARTELLE ADESIVI

Folder of Malossi mini stickers

Dimensioni 11,5x16,8 cm

Dimensions 11,5x16,8 cm

Malossi colorati

Malossi coloured

3314153

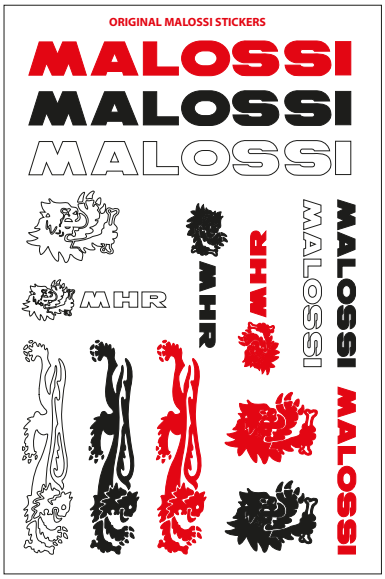

Malossi nero e argento

Malossi black and silver

3314154

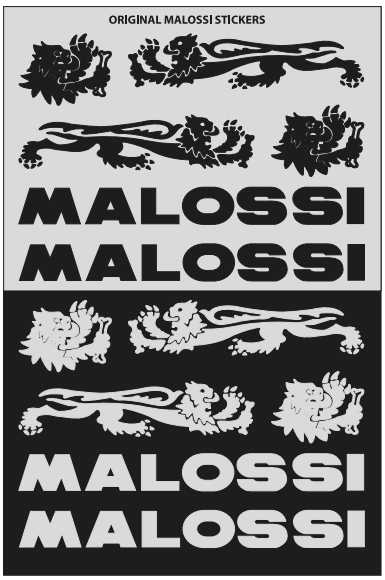

Malossi argento cromato

Malossi silver chromed

3314465

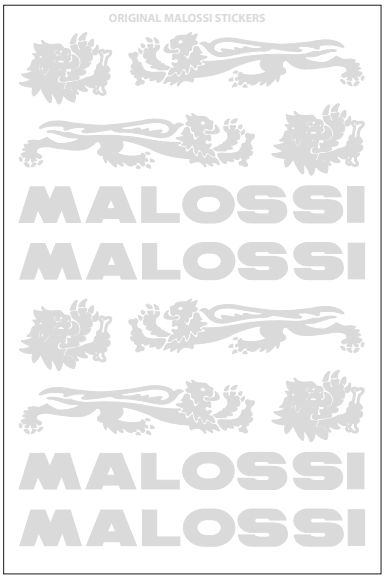

Malossi emoji

Malossi emoji

3318139



Dimensioni 8x14 cm

Dimensions 8x14 cm

Malossi gas

Malossi gas

3318121



Malossi camp

Malossi camp

3318517



Malossi fluo

Malossi fluo

3318712



Brand	Model	Article	
APRILIA	SR MAX 125 ie 4T LC euro 3 2011>2014 (M357M)	4513099	
APRILIA	SR MAX 300 ie 4T LC euro 3	4513099	
APRILIA	SR GT Sport 125 ie 4T LC euro 5 2022>2024 (MD51M)	4519772B	
APRILIA	SR GT Sport 200 ie 4T LC euro 5 2022>2024	4519772B	
BMW	C 600 Sport ie 4T LC euro 3 <2015	4515571B	
BMW	C 650 Sport ie 4T LC euro 4 2016> (652EA)	4515571B	
BMW	C 400 X ie 4T LC euro 5 2021>2024	4519877	
GILERA	NEXUS 125 4T LC euro 3 2007>2008 (M355M)	4513099	
GILERA	NEXUS 125 ie 4T LC euro 3 2008>2010 (M357M)	4513099	
GILERA	NEXUS 250 ie 4T LC euro 3	4513099	
GILERA	NEXUS 300 ie 4T LC euro 3	4513099	
GILERA	NEXUS 500 ie 4T LC euro 23	4513099	
GILERA	GP 800 4T LC (PIAGGIO M554M)	4514399	
HONDA	SH I 300 ie 4T LC euro 2 <2010 (NF02E)	4514607	
HONDA	SH I 300 ie 4T LC euro 3 2011>2014 (NF02E)	4515124	
HONDA	INTEGRA 700 ie 4T LC	4515621B	
HONDA	INTEGRA 750 ie 4T LC	4515621B	
HONDA	SH i ABS 125 ie 4T LC euro 3 2013>2016 (JF41E)	4516053	
HONDA	SH i ABS 150 ie 4T LC euro 3 2013>2016 (KF13E)	4516053	
HONDA	SH I 300 ie 4T LC euro 4 2015>2017 (NF05E)	4517070	
HONDA	SH I 300 ie 4T LC euro 4 2018>	4517070	
HONDA	SH i ABS 125 ie 4T LC euro 4 2017>2019 (JFG8E)	4517729	
HONDA	SH i ABS 150 ie 4T LC euro 4 2017>2019	4517729	
HONDA	XADV 750 ie 4T LC euro 4 2017	4518330B	
HONDA	XADV 750 ie 4T LC euro 4 2018>2020	4518330B	
HONDA	FORZA 125 ie 4T LC euro 3 <2016 (JF60E)	4518331	
HONDA	FORZA 125 ie 4T LC euro 4 2017>2020 (JF69E)	4518331	
HONDA	FORZA 300 ie 4T LC euro 4 2018>2020 (NF07E)	4518331	
HONDA	SH i ABS 125 ie 4T LC euro 5 2020>2023 (JF90E)	4518766	
HONDA	SH i ABS 125 ie 4T LC euro 5+ 2024> (JF90E)	4518766	
HONDA	SH i ABS 150 ie 4T LC euro 5 2020>2023	4518766	
HONDA	SH i ABS 150 ie 4T LC euro 5+ 2024> (KF40E)	4518766	
HONDA	SH I 350 ie 4T LC euro 5 2021>2022 (NF11E)	4519021	
HONDA	SH I 350 ie 4T LC euro 5 2023>2024 (NF11E)	4519021	
HONDA	SH I 350 ie 4T LC euro 5+ 2025>	4519021	
HONDA	XADV 750 ie 4T LC euro 5 2021>2024	4519043B	
HONDA	XADV 750 ie 4T LC euro 5+ 2025>	4519043B	
HONDA	FORZA 125 ie 4T LC euro 5 2021>2024 (JK02E)	4519198	
HONDA	FORZA 125 ie 4T LC euro 5+ 2025>	4519198	
HONDA	FORZA 350 ie 4T LC euro 5 2021>2024 (NF09E)	4519198	
HONDA	FORZA 350 ie 4T LC euro 5+ 2025>	4519198	
HONDA	FORZA 750 ie 4T LC euro 5 2021>2024	4519199B	
HONDA	ADV 350 ie 4T LC euro 5 2021>2024 (NF13E)	4519573B	
HONDA	ADV 350 ie 4T LC euro 5+ 2025>	4519573B	
ITALJET	DRAGSTER 125 ie 4T LC euro 5 2021> (JC1P58MI3)	4519881	
ITALJET	DRAGSTER 200 4T LC euro 5 2021> (JC1P63ML4B)	4519881	
ITALJET	DRAGSTER 300 ie 4T LC euro 5 2024> (AZCR)	4519881	

Brand	Model	Article	
KAWASAKI	J 125 ie 4T LC euro 3 <2016 (WS25)	4516330B	
KAWASAKI	J 125 ie 4T LC euro 4 2017>	4516330B	
KAWASAKI	J 300 ie 4T LC euro 3 (WS60)	4516330B	
KAWASAKI	J 300 ie 4T LC euro 4 2018> (WS60B)	4516330B	
KYMCO	DINK Street 125 ie 4T LC euro 3 (SK25)	4515116	
KYMCO	DINK Street 200 ie 4T LC euro 3 (SK40)	4515116	
KYMCO	DINK Street 300 ie 4T LC euro 3 (SK60)	4515116	
KYMCO	DINK Street 300 ie 4T LC euro 3 2012> (SK60A)	4515116	
KYMCO	DOWNTOWN 125 ie 4T LC euro 3 <2016 (SK25)	4515116	
KYMCO	DOWNTOWN 200 ie 4T LC euro 3 (SK40)	4515116	
KYMCO	DOWNTOWN 300 ie 4T LC euro 3 (SK60)	4515116	
KYMCO	DOWNTOWN 300 ie 4T LC euro 3 2012> (SK60A)	4515116	
KYMCO	NIKITA 200 ie 4T LC euro 3	4515116	
KYMCO	NIKITA 300 ie 4T LC euro 3	4515116	
KYMCO	SUPER DINK 125 ie 4T LC euro 3 <2016 (SK25)	4515116	
KYMCO	SUPER DINK 200 ie 4T LC euro 3 (SK40)	4515116	
KYMCO	SUPER DINK 300 ie 4T LC euro 3 (SK60)	4515116	
KYMCO	SUPER DINK 300 ie 4T LC euro 3 2012> (SK60A)	4515116	
KYMCO	DOWNTOWN 125 ie 4T LC euro 4 2017> (SK25E)	4517073	
KYMCO	DOWNTOWN i ABS 350 ie 4T LC euro 4 2016>2020 (SK64G)	4517073	
KYMCO	DOWNTOWN i ABS 350 ie 4T LC euro 5 2021> (SK64H)	4517073	
KYMCO	SUPER DINK 125 ie 4T LC euro 4 2017> (SK25E)	4517073	
KYMCO	SUPER DINK 350 ie 4T LC euro 4 2017> (SK64G)	4517073	
KYMCO	GRAND DINK 125 ie 4T LC euro 4 2017> (KS25A)	4517457	
KYMCO	GRAND DINK 300 ie 4T LC euro 4 2017> (KS60A)	4517457	
KYMCO	XTown 125 ie 4T LC euro 4 <2020 (KS25A)	4517457	
KYMCO	XTown 125 ie 4T LC euro 5 2021> (KS25B)	4517457	
KYMCO	XTown 300 ie 4T LC euro 4 2016>2020 (KS60A)	4517457	
KYMCO	AK 550 ie 4T LC euro 4 2017>2020 (SAA1)	4517844	
KYMCO	AK 550 ie 4T LC euro 5 2021> (SBA1)	4517844	
KYMCO	AGILITY R16 + 125 ie 4T euro 4 <2020 (KL25F)	4517875	
KYMCO	XCITING 400i S 400 ie 4T LC euro 4 2018>2020 (SK80C)	4518354	
KYMCO	XCITING 400i S 400 ie 4T LC euro 5 2021> (SK80D)	4518354	
KYMCO	XCITING VS 400 ie 4T LC euro 5 2023>	4518354	
KYMCO	LIKE 50 4T euro 4 2018>	4518407	
KYMCO	LIKE CBS 125 ie 4T euro 4 2018> (TE 25)	4518407	
KYMCO	LIKE CBS 150 ie 4T euro 4 2018>	4518407	
KYMCO	PEOPLE S 300 ie 4T LC euro 4 2019> (BF60C)	4518641	
KYMCO	LIKE S 125 ie 4T LC euro 5 2021> (TE25)	4519189	
KYMCO	DT X360 125 ie 4T LC euro 5 2022> (SK25S)	4519193	
KYMCO	DT X360 350 ie 4T LC euro 5 2021> (SK64D)	4519193	
KYMCO	AK Premium 550 ie 4T LC euro 5 2023> (SBA1B)	4519802	
KYMCO	DOWNTOWN GT 350 ie 4T LC euro 5+ 2024>	4520130	
LML	STAR 125 2T	4515120	
LML	STAR 150 2T	4515120	
LML	STAR Deluxe 125 4T (E25)	4515120	
LML	STAR Deluxe 150 4T (E25)	4515120	

Brand	Model	Article	
LML	STAR 125 2T	4515122	
LML	STAR 150 2T	4515122	
LML	STAR Deluxe 125 4T (E25)	4515122	
LML	STAR Deluxe 150 4T (E25)	4515122	
MBK	EVOLIS 250 ie 4T LC 2014>	4516051B	
MBK	EVOLIS 400 ie 4T LC	4516051B	
PEUGEOT	XP 400 ALLURE 4T LC ie euro 5 2023>	4520083	
PEUGEOT	XP 400 GT 4T LC ie euro 5 2023>	4520083	
PIAGGIO	BEVERLY 300 ie 4T LC euro 3 2010>2016 (M692M)	4516055	
PIAGGIO	BEVERLY 300 ie 4T LC euro 4 2017>2020 (MA21M)	4516055	
PIAGGIO	BEVERLY Sport Touring 350 ie 4T LC euro 3 <2016 (M693M)	4516055	
PIAGGIO	BEVERLY Sport Touring 350 ie 4T LC euro 4 2017>	4516055	
PIAGGIO	LIBERTY 3V iGet 50 ie 4T euro 5 2021> (CD11M)	4517366	
PIAGGIO	LIBERTY iGet 125 ie 4T euro 4 2017>2020	4517366	
PIAGGIO	LIBERTY iGet 125 ie 4T euro 5 2021>2024 (MD41M)	4517366	
PIAGGIO	LIBERTY iGet 150 ie 4T euro 4 2017>2020	4517366	
PIAGGIO	LIBERTY iGet 150 ie 4T euro 5 2021>2024 (MD42M)	4517366	
PIAGGIO	LIBERTY iGet 50 ie 4T euro 3 2016>2017 (C541M)	4517366	
PIAGGIO	LIBERTY iGet 50 ie 4T euro 4 2018>2020 (CA11M)	4517366	
PIAGGIO	LIBERTY iGet ABS 125 ie 4T euro 3 (M893M)	4517366	
PIAGGIO	LIBERTY iGet ABS 150 ie 4T euro 3	4517366	
PIAGGIO	LIBERTY S iGet 125 ie 4T euro 4 2017>2020	4517366	
PIAGGIO	LIBERTY S iGet 125 ie 4T euro 5 2021>2024 (MD41M)	4517366	
PIAGGIO	LIBERTY S iGet 150 ie 4T euro 4 2017>2020	4517366	
PIAGGIO	MEDLEY 125 ie 4T LC euro 4 2016>2019 (MA01M)	4517448	
PIAGGIO	MEDLEY 150 ie 4T LC euro 4 2016>2019	4517448	
PIAGGIO	MP3 350 ie 4T LC euro 4 2018> (TA14M)	4518351B	
PIAGGIO	MP3 Sport 400 ie 4T LC euro 5 2021>2024	4518351B	
PIAGGIO	MP3 Sport 400 ie 4T LC euro 5+ 2025>	4518351B	
PIAGGIO	MEDLEY 125 ie 4T LC euro 4 2020> (MB01M)	4518761	
PIAGGIO	MEDLEY 125 ie 4T LC euro 5 2021>2024 (MD01M)	4518761	
PIAGGIO	MEDLEY 125 ie 4T LC euro 5+ 2025>	4518761	
PIAGGIO	MEDLEY 150 ie 4T LC euro 4 2020>	4518761	
PIAGGIO	MEDLEY 150 ie 4T LC euro 5 2021>2024 (MD02M)	4518761	
PIAGGIO	MEDLEY 200 ie 4T LC euro 5+ 2025>	4518761	
PIAGGIO	MEDLEY S 125 ie 4T LC euro 4 2020> (MB01M)	4518761	
PIAGGIO	MEDLEY S 125 ie 4T LC euro 5 2021>2024 (MD01M)	4518761	
PIAGGIO	MEDLEY S 125 ie 4T LC euro 5+ 2025>	4518761	
PIAGGIO	MEDLEY S 150 ie 4T LC euro 4 2020>	4518761	
PIAGGIO	MEDLEY S 150 ie 4T LC euro 5 2021>2024 (MD02M)	4518761	
PIAGGIO	MEDLEY S 200 ie 4T LC euro 5+ 2025>	4518761	
PIAGGIO	BEVERLY HPE 300 ie 4T LC euro 5 2021> (MD21M)	4519027	
PIAGGIO	BEVERLY HPE 400 ie 4T LC euro 5 2021>2024 (MD22M)	4519027	
PIAGGIO	BEVERLY HPE 400 ie 4T LC euro 5+ 2025>	4519027	
PIAGGIO	BEVERLY S HPE 400 ie 4T LC euro 5+ 2025>	4519027	
PIAGGIO	LIBERTY iGet 125 ie 4T euro 5+ 2025> (MD43M)	4520232	
PIAGGIO	LIBERTY iGet 150 ie 4T euro 5+ 2025> (MD44M)	4520232	

Brand	Model	Article	
PIAGGIO	LIBERTY S iGet 125 ie 4T euro 5+ 2025> (MD43M)	4520232	
PIAGGIO	LIBERTY S iGet 150 ie 4T euro 5+ 2025> (MD44M)	4520232	
VESPA	Granturismo L GT 125 4T LC (LEADER)	4515118	
VESPA	Granturismo L GT 200 4T LC (M312M)	4515118	
VESPA	GTS 125 4T LC euro 3 <2013 (M315M)	4515118	
VESPA	GTS 125 ie 4T LC euro 4 2017>2020	4515118	
VESPA	GTS 125 ie 4T LC euro 5 2021>2022	4515118	
VESPA	GTS 150 ie 4T LC euro 4 2017>2020	4515118	
VESPA	GTS 250 ie 4T LC	4515118	
VESPA	GTS 300 ie 4T LC euro 4 2017>2018 (MA33M)	4515118	
VESPA	GTS HPE 300 ie 4T LC euro 4 2019>2020 (MA36M)	4515118	
VESPA	GTS HPE 300 ie 4T LC euro 5 2021>2022 (MD31M)	4515118	
VESPA	GTS Super 125 ie 4T LC euro 3 <2013 (M455M)	4515118	
VESPA	GTS Super 125 ie 4T LC euro 3 2014>2016 (M455M)	4515118	
VESPA	GTS Super 125 ie 4T LC euro 4 2017>2020	4515118	
VESPA	GTS Super 125 ie 4T LC euro 5 2021>2022	4515118	
VESPA	GTS Super 150 ie 4T LC euro 4 2017>2020	4515118	
VESPA	GTS Super 300 ie 4T LC euro 3 <2013 (QUASAR M454M)	4515118	
VESPA	GTS Super 300 ie 4T LC euro 3 2014>2016 (QUASAR M454M)	4515118	
VESPA	GTS Super 300 ie 4T LC euro 4 2017>2018 (QUASAR M458MM45EM)	4515118	
VESPA	GTS Super HPE 300 ie 4T LC euro 4 2019>2020 (MA36M)	4515118	
VESPA	GTS Super HPE 300 ie 4T LC euro 5 2021>2022 (MD31M)	4515118	
VESPA	GTS Super RACING SIXTIES HPE 300 ie 4T LC euro 5 2021>2022 (MD31M)	4515118	
VESPA	GTS Super Sport HPE 300 ie 4T LC euro 4 2019>2020 (MA36M)	4515118	
VESPA	GTS Super Sport HPE 300 ie 4T LC euro 5 2021>2022 (MD31M)	4515118	
VESPA	GTS Super Tech HPE 300 ie 4T LC euro 4 2019>2020 (MA36M)	4515118	
VESPA	GTS Super Tech HPE 300 ie 4T LC euro 5 2021>2022 (MD31M)	4515118	
VESPA	GTS Touring HPE 300 ie 4T LC euro 4 2019>2020 (MA36M)	4515118	
VESPA	GTS Touring HPE 300 ie 4T LC euro 5 2021>2022 (MD31M)	4515118	
VESPA	PX 125 2T euro 01	4515120	
VESPA	PX 125 2T euro 2 (VLX2M)	4515120	
VESPA	PX 125 2T euro 3	4515120	
VESPA	PX 150 2T euro 01	4515120	
VESPA	PX 150 2T euro 2 (VLX2M)	4515120	
VESPA	PX 150 2T euro 3	4515120	
VESPA	PX 80 2T	4515120	
VESPA	PX E 200 2T	4515120	
VESPA	PX 125 2T euro 01	4515122	
VESPA	PX 125 2T euro 2 (VLX2M)	4515122	
VESPA	PX 125 2T euro 3	4515122	
VESPA	PX 150 2T euro 01	4515122	
VESPA	PX 150 2T euro 2 (VLX2M)	4515122	
VESPA	PX 150 2T euro 3	4515122	
VESPA	PX 80 2T	4515122	
VESPA	PX E 200 2T	4515122	
VESPA	LX 125 4T euro 2 2006>2007 (LEADER M441M)	4516054	
VESPA	LX 125 ie 4T euro 3 2007>2011 (LEADER M443M)	4516054	

Brand	Model	Article	
VESPA	LX 150 4T (LEADER)	4516054	
VESPA	LX 150 ie 4T euro 3 (LEADER)	4516054	
VESPA	LX 3V 125 ie 4T euro 3 2012> (M687M)	4516054	
VESPA	LX 3V 150 ie 4T euro 3 2012> (M688M)	4516054	
VESPA	LX 50 2T	4516054	
VESPA	LX 50 4T	4516054	
VESPA	ELETTRICA 45 KM/H 2019> (CB01E)	4516332	
VESPA	Primavera 3V 125 ie 4T euro 3 2014>2015 (M811M)	4516332	
VESPA	Primavera 3V 150 ie 4T euro 3 2014>2015 (M812M)	4516332	
VESPA	Primavera 3V iGet 50 ie 4T euro 4 2018>2020 (CA03M)	4516332	
VESPA	Primavera 3V iGet 50 ie 4T euro 5 2021>2023 (CD01M)	4516332	
VESPA	Primavera 3V iGet 50 ie 4T euro 5 2024>	4516332	
VESPA	Primavera 4V 50 4T euro 2 (C532M)	4516332	
VESPA	Primavera 50 2T euro 2 (C533M)	4516332	
VESPA	Primavera Batik iGet 125 ie 4T euro 5+ 2025>	4516332	
VESPA	Primavera iGet 125 ie 4T euro 4 2016>2020	4516332	
VESPA	Primavera iGet 125 ie 4T euro 5 2021>2023 (MD11M)	4516332	
VESPA	Primavera iGet 125 ie 4T euro 5+ 2024> (MD13M)	4516332	
VESPA	Primavera iGet 150 ie 4T euro 4 2016>2020	4516332	
VESPA	Primavera iGet 150 ie 4T euro 5 2021>2023 (MD12M)	4516332	
VESPA	Primavera RED iGet 125 ie 4T euro 5+ 2025>	4516332	
VESPA	Primavera S 3V iGet 50 ie 4T euro 5 2024>	4516332	
VESPA	Primavera S iGet 125 ie 4T euro 5+ 2025>	4516332	
VESPA	Primavera Tech 3V iGet 50 ie 4T euro 5 2024>	4516332	
VESPA	Primavera Tech iGet 125 ie 4T euro 5+ 2025>	4516332	
VESPA	Sprint iGet 150 ie 4T euro 5 2021>2023	4516332	
VESPA	Sprint 3V 125 ie 4T euro 3 2014>2015	4516342	
VESPA	Sprint 3V 150 ie 4T euro 3 2014>	4516342	
VESPA	SPRINT 3V iGet 50 ie 4T euro 4 2018>2020 (CA01M)	4516342	
VESPA	SPRINT 3V iGet 50 ie 4T euro 5 2021>2023 (CD01M)	4516342	
VESPA	Sprint 4V 50 4T euro 2	4516342	
VESPA	Sprint 50 2T euro 2	4516342	
VESPA	Sprint iGet 125 ie 4T euro 4 2016>2020 (MA13M)	4516342	
VESPA	Sprint iGet 125 ie 4T euro 5 2021>2023 (MD11M)	4516342	
VESPA	Sprint iGet 150 ie 4T euro 4 2016>2020	4516342	
VESPA	Sprint S 3V iGet 50 ie 4T euro 5 2024>	4516342	
VESPA	Sprint S iGet 125 ie 4T euro 5+ 2024>	4516342	
VESPA	GTS 125 ie 4T LC euro 5 2023>	4519683	
VESPA	GTS 310 ie 4T LC euro 5+ 2025> (MD38M)	4519683	
VESPA	GTS HPE 300 ie 4T LC euro 5 2023> (MD31M)	4519683	
VESPA	GTS Super 125 ie 4T LC euro 5 2023>	4519683	
VESPA	GTS Super 310 ie 4T LC euro 5+ 2025> (MD38M)	4519683	
VESPA	GTS Super HPE 300 ie 4T LC euro 5 2023> (MD31M)	4519683	
VESPA	GTS Super Sport 125 ie 4T LC euro 5 2023>	4519683	
VESPA	GTS Super Sport 310 ie 4T LC euro 5+ 2025> (MD38M)	4519683	
VESPA	GTS Super Sport HPE 300 ie 4T LC euro 5 2023>	4519683	
VESPA	GTS Super Tech 125 ie 4T LC euro 5 2023>	4519683	

Brand	Model		Article	
VESPA	GTS Super Tech HPE 300 ie 4T LC euro 5 2023>		4519683	
VOGE	SFIDA SR4 400 ie 4T LC euro 5 2023> (LX1P80MP)		4519755B	
VOGE	SFIDA SR4 MAX 400 ie 4T LC euro 5 2023> (LX1P80MP)		4519755B	
VOGE	SFIDA SR1 125 ie 4T LC euro 5 2023>2024 (LC1P52MI)		4519887	
VOGE	SFIDA SR16 125 ie 4T LC euro 5+ 2025> (LC1P52MI)		4520210	
VOGE	SFIDA SR1 ADV 125 ie 4T LC euro 5+ 2025> (LC1P52MI)		4520241	
YAMAHA	X MAX 125 ie 4T LC euro 3 <2008		4514400	
YAMAHA	X MAX 250 4T LC		4514400	
YAMAHA	X MAX 250 ie 4T LC euro 3 2008>2009 (G362E)		4514400	
YAMAHA	X MAX 125 ie 4T LC euro 3 2009>2013		4514604	
YAMAHA	X MAX 250 ie 4T LC euro 3 2010>2013 (G389E)		4514604	
YAMAHA	T MAX 500 ie 4T LC 2008>2011	SPORT	4514760	
YAMAHA	T MAX 530 ie 4T LC 2012>2014 (J409E)	SPORT	4515359	
YAMAHA	T MAX 530 ie 4T LC 2015>2016 (J409E)	SPORT	4515359	
YAMAHA	T MAX (carb.) 500 4T LC 2001>2003		4515361	
YAMAHA	T MAX 500 ie 4T LC 2004>2007		4515361	
YAMAHA	X MAX 125 ie 4T LC euro 3 2014>2016 (E3M1E)		4516051B	
YAMAHA	X MAX 125 ie 4T LC euro 4 2017 (E3V9E)		4516051B	
YAMAHA	X MAX 250 ie 4T LC euro 3 2014>2017 (G3B3E)		4516051B	
YAMAHA	X MAX 400 ie 4T LC euro 3 <2016 (H330E)		4516051B	
YAMAHA	T MAX 530 ie 4T LC 2012>2014 (J409E)	MHR	4516328	
YAMAHA	T MAX 530 ie 4T LC 2015>2016 (J409E)	MHR	4516328	
YAMAHA	MAJESTY S 125 ie 4T LC		4516502	
YAMAHA	SMax 160 ie 4T LC		4516502	
YAMAHA	T MAX 500 ie 4T LC 2008>2011	MHR	4517810	
YAMAHA	X MAX 125 ie 4T LC euro 4 2018>2020 (E31LE)		4517837	
YAMAHA	X MAX 125 ie 4T LC euro 5 2021>2022 (E33FE)		4517837	
YAMAHA	X MAX 250 ie 4T LC 2021> APAC		4517837	
YAMAHA	X MAX 300 ie 4T LC euro 4 2017>2020 (H336E)		4517837	
YAMAHA	X MAX 300 ie 4T LC euro 5 2021>2022		4517837	
YAMAHA	X MAX 400 ie 4T LC euro 4 2017>2019 (H340E)		4517837	
YAMAHA	X MAX Tech MAX 300 ie 4T LC euro 5 2021>2022		4517837	
YAMAHA	X MAX Tech MAX 400 ie 4T LC euro 4 2019>2021 (H340E)		4517837	
YAMAHA	T MAX 530 ie 4T LC euro 4 2017> (J415E)		4517841B	
YAMAHA	T MAX 560 ie 4T LC euro 5 2020>2021 (J420E)		4517841B	
YAMAHA	T MAX DX 530 ie 4T LC euro 4 2017> (J415E)		4517841B	
YAMAHA	T MAX SX 530 ie 4T LC euro 4 2017> (J415E)		4517841B	
YAMAHA	T MAX Tech MAX 560 ie 4T LC euro 5 2020>2021 (J420E)		4517841B	
YAMAHA	T MAX 560 ie 4T LC euro 5 2022>2024		4519416B	
YAMAHA	T MAX Tech MAX 560 ie 4T LC euro 5 2022>2024		4519416B	
YAMAHA	X MAX 125 ie 4T LC euro 5 2023>2024		4519948	
YAMAHA	X MAX 300 ie 4T LC euro 5 2023>2024 (H348E)		4519948	

S C R E E N S



9919981.25



malossi.com